CITY OF PHOENIX
AVIATION DEPARTMENT
DESIGN & CONSTRUCTION SERVICES

PROJECT NAME	**PHOENIX GOODYEAR AIRPORT NEW APRON AND TAXIWAY CONNECTOR**
ADDRESS	**1658 S LITCHFIELD RD, GOODYEAR, AZ 85338**
PROJECT NUMBER	**AV41000077 FAA/ADOT**
FAA GRANT NUMBER	
ADOT GRANT NUMBER	

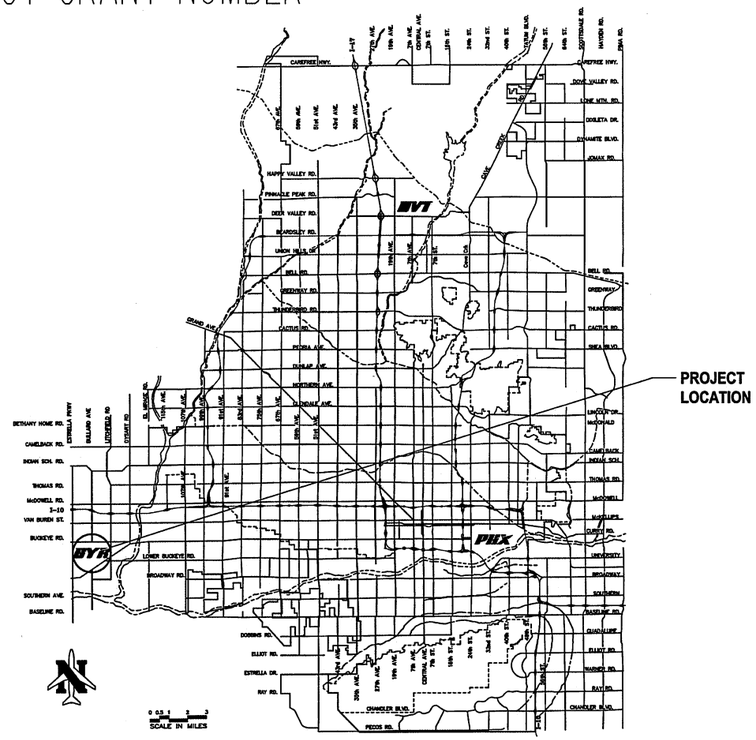

Vicinity Map

PER CITY OF PHOENIX CODE CHAPTER 2, SECTION 2-28. THESE PLANS ARE FOR OFFICIAL USE ONLY AND MAY NOT BE SHARED WITH OTHERS EXCEPT AS REQUIRED TO FULFILL THE OBLIGATIONS OF CONTRACTOR'S CONTRACT WITH THE CITY OF PHOENIX.

MAYOR
KATE GALLEGO

VICE MAYOR
CARLOS GARCIA

CITY COUNCIL

DISTRICT NO. 1 ANN O'BRIEN
DISTRICT NO. 2 JIM WARING
DISTRICT NO. 3 DEBRA STARK
DISTRICT NO. 4 LAURA PASTOR
DISTRICT NO. 5 BETTY GUARDADO
DISTRICT NO. 6 SAL DICICCIO
DISTRICT NO. 7 YASSAMIN ANSARI
DISTRICT NO. 8 CARLOS GARCIA

PHOENIX AVIATION ADVISORY BOARD

VALENCIA FISKER, CHAIR
SETH SCOTT, VICE CHAIR

RUBEN ALONZO
SETH SCOTT
ANDREW M. COHN
SANDRA FERNIZA
CAMILO HENAO, EX-OFFICIO
STEPHANIE FLEISCHMAN CHERNY
BRIAN J. FOSTER
RON PRICE
VALENCIA FISKER
VERMA PASTOR

CITY MANAGER — JEFF BARTON

CITY ENGINEER — ERIC J. FROBERG, P.E.

DIRECTOR OF AVIATION SERVICES — CHAD R. MAKOVSKY, C.M.

APPROVALS

DEPUTY AVIATION DIRECTOR
DESIGN & CONSTRUCTION SERVICES DIVISION — DATE 02.07.2023

CITY ENGINEER — DATE 02/07/2023

Registered Professional Engineer (Civil) CERTIFICATE NO. 33442 LANCE R. McINTOSH Date Signed 02-07-23 Arizona U.S.A. Expires: 3-31-23

G001

Sheet 1 of 61 Sheets

PHOENIX GOODYEAR AIRPORT NEW APRON AND TAXIWAY CONNECTOR

PHX GYR
CITY OF PHOENIX AVIATION DEPARTMENT

SHEET NO.	REFERENCE NO.	TITLE
1	G-001	TITLE SHEET
2	G-002	SHEET INDEX AND APPROXIMATE QUANTITIES
3	G-003	ABBREVIATIONS AND LEGEND
4	G-004	GENERAL NOTES
5	V-101	GENERAL PLAN AND SURVEY CONTROL
6	GC-101	CONSTRUCTION SAFETY AND PHASING PLAN
7	GC-102	CONSTRUCTION SAFETY AND PHASING PLAN
8	GC-201	EROSION CONTROL PLAN BASE BID
9	GC-202	EROSION CONTROL PLAN BID ALT 1
10	GC-203	EROSION CONTROL PLAN BID ALT 2
11	GC-204	EROSION CONTROL PLAN BID ALT 3
12	GC-205	EROSION CONTROL PLAN BID ALT 4
13	CD-101	DEMOLITION PLAN BASE BID
14	CD-102	DEMOLITION PLAN BID ALT 2
15	CD-103	DEMOLITION PLAN BID ALT 3
16	CD-104	DEMOLITION PLAN BID ALT 4
17	CG-101	GEOMETRY PLAN BASE BID
18	CG-102	GEOMETRY PLAN BID ALT 2
19	CG-103	GEOMETRY PLAN BID ALT 3
20	CG-104	GEOMETRY PLAN BID ALT 4
21	CG-201	JOINT LAYOUT PLAN BASE BID
22	CG-202	JOINT LAYOUT PLAN BID ALT 2
23	CG-203	JOINT LAYOUT PLAN BID ALT 3
24	CG-204	JOINT LAYOUT PLAN BID ALT 4
25	CP-101	PAVING PLAN BASE BID
26	CP-102	PAVING PLAN BASE BID
27	CP-103	PAVING PLAN BID ALT 2
28	CP-104	PAVING PLAN BID ALT 3
29	CP-105	PAVING PLAN BID ALT 4
30	CP-501	PAVING AND JOINT DETAILS
31	CP-502	PAVING AND JOINT DETAILS
32	CU-101	GRADING AND DRAINAGE PLAN BASE BID
33	CU-102	GRADING AND DRAINAGE PLAN BID ALT 1
34	CU-103	GRADING AND DRAINAGE PLAN BID ALT 2
35	CU-104	GRADING AND DRAINAGE PLAN BID ALT 3
36	CU-105	GRADING AND DRAINAGE PLAN BID ALT 4
37	CU-106	GRADING AND DRAINAGE DETAILS
38	CU-107	GRADING AND DRAINAGE DETAILS
39	CM-101	MARKING PLAN BASE BID
40	CM-102	MARKING PLAN BID ALT 2
41	CM-103	MARKING PLAN BID ALT 3
42	CM-104	MARKING PLAN BID ALT 4
43	CM-501	MARKING DETAILS
44	E-101	ELECTRICAL LEGEND AND NOTES
45	E-102	ELECTRICAL NOTES
46	ED-101	AIRFIELD ELECTRICAL DEMOLITION SITE PLAN
47	EA-101	AIRFIELD ELECTRICAL INSTALLATION PLAN
48	EA-102	AIRFIELD ELECTRICAL INSTALLATION PLAN
49	EA-103	AIRFIELD ELECTRICAL INSTALLATION PLAN
50	EA-104	AIRFIELD ELECTRICAL INSTALLATION PLAN
51	EA-401	APRON LIGHT PHOTOMETRICS (BASE BID)
52	EA-501	ELECTRICAL DUCTBANK DETAILS
53	EA-502	GROUNDING DETAILS
54	EA-503	HANDHOLD DETAILS
55	EA-504	2' X 2' X 3' HANDHOLE AND JUNCTION BOX DETAILS
56	EA-505	ELEVATED TAXIWAY EDGE LIGHT AND APRON LIGHT DETAILS
57	EA-506	AIRFIELD GUIDANCE SIGN BASE DETAILS
58	EA-507	AIRFIELD GUIDANCE SIGN DETAILS
59	EA-601	SIGN SCHEDULE AND EQUIPMENT DATA TABLES
60	EA-602	SINGLE LINE DIAGRAM AND LOAD CALCULATIONS
61	EA-603	PANEL SCHEDULE AND LIGHTING CONTROL SCHEMATIC

A1 SHEET INDEX
NOT TO SCALE

BASE BID

1	C-100	CONTRACTOR QUALITY CONTROL PLAN (CQCP)	1	LS
2	C-102	TEMPORARY POLLUTION, EROSION, AND SILTATION CONTROL	1	LS
3	C-105	MOBILIZATION	1	LS
4	C-106	SAFETY, SECURITY AND MAINTENANCE OF TRAFFIC	1	LS
5	P-101-5.1	COLD MILLING	3640	SY
6	P-101-5.2	CONCRETE PAVEMENT REMOVAL	3760	SY
7	P-152-4.1	UNCLASSIFIED EXCAVATION	745	CY
8	P-152-4.2	REMOVAL AND REPLACEMENT OF UNSUITABLE MATERIAL (ALLOWANCES)	1	FA
9	P-154-5.1	6" THICK SUBBASE COURSE	11085	SY
10	P-209-5.1	12" CRUSHED AGGREGATE BASE COURSE	1745	CY
11	P-209-5.2	16" CRUSHED AGGREGATE BASE COURSE	25	CY
12	P-304-8.1	6" THICK CEMENT-TREATED BASE COURSE	11085	SY
13	P-401-8.1	4" THICK BITUMINOUS SURFACE COURSE	1215	TON
14	P-401-8.2	9" THICK BITUMINOUS SURFACE COURSE	30	TON
15	P-501-8.1	17" PORTLAND CEMENT CONCRETE PAVEMENT	11085	SY
16	P-602-5.1	BITUMINOUS PRIME COAT	25	TON
17	P-620-5.1	TAXIWAY PAINTSTRIPING (YELLOW, REFLECTORIZED)	2470	SF
18	P-620-5.1	EXISTING PAVEMENT MARKING REMOVAL	260	SF
19	D-701-5.1	24" DIAMETER REINFORCED CONCRETE PIPE	380	LF
20	D-750-5.1	12" AIRCRAFT RATED TRENCH DRAIN	290	LF
21	D-751-5.1	AIRCRAFT RATED CATCH BASIN	1	EA
22	TSP-1	SOIL STERILANT	16310	SY
23	TSP-2	MISCELLANEOUS REMOVALS AND OTHER WORK	1	LS
24	TSP-3	ADJUST UTILITY BOX AND COVER TO GRADE	3	EA
25	TSP-4	EXISTING UTILITY RELOCATION (ALLOWANCES)	1	FA
26	TSP-5	RIP RAP (D50-6", DEPTH=24")	70	CY
27	L-100-5.1	REMOVE AND SALVAGE FAA SWS EQUIPMENT FOR REINSTALLATION. DEMO	1	LS
28	L-100-5.2	TEMPORARY AIRFIELD LIGHTING CABLE JUMPERS	1	LS
29	L-100-5.3	REMOVE AND SALVAGE EXISTING EDGE LIGHT AND ISOLATION TRANSFORME	1	EA
30	L-100-5.4	REMOVE, TEMPORARILY MOUNT AND POWER AIRFIELD GUIDANCE SIGN AND	1	EA
31	L-100-5.5	REINSTALL FAA SWS EQUIPMENT ON NEW FOUNDATION AND GROUNDING,	1	LS
32	L-100-5.6	REMOVE, RELOCATE, REPLACE CIRCUIT BREAKERS IN SWS SHELTER PANEL. AI	1	EA
33	L-108-5.1	L-824, TYPE C, 2/C #8 AWG, 5KV CABLE	2895	LF
34	L-108-5.2	3-4/0, 4/0 GND (SWS CIRCUIT)	4162	LF
35	L-110-5.1	SINGLE-WAY, (1) - 2" CONDUIT, SLURRY ENCASED	680	LF
36	L-110-5.2	MULTIPLE-WAY, (4) - 2" CONDUIT, SLURRY ENCASED	645	LF
37	L-110-5.3	MULTIPLE-WAY, (4) - 2" CONDUIT, CONCRETE ENCASED	105	LF
38	L-110-5.4	MULTIPLE-WAY, (5) - 2" CONDUIT, SLURRY ENCASED	3950	LF
39	L-110-5.5	MULTIPLE-WAY, (5) - 2" CONDUIT, CONCRETE ENCASED	325	LF
40	L-115-5.1	NEW HANDHOLE, PREFABRICATED CONCRETE 2'X3'X3' WITH AIRCRAFT RATEI	10	EA
41	L-115-5.2	NEW PULLBOX, SIZE 5, (12"X24") FURNISHED AND INSTALLED WITH GRAVEL S	2	EA
42	L-125-5.1	NEW L-858(L) SIZE 2, 3-MODULE, AIRFIELD GUIDANCE SIGN, ON NEW SIGN BA	3	EA
43	L-125-5.2	NEW ELEVATED L-861T(L) LED TAXIWAY EDGE LIGHT AND ISOLATION TRANSF	11	EA
44	L-125-5.3	INSTALL SALVAGED TAXIWAY EDGE LIGHT ON EXISTING BASE CAN	1	EA
45	L-125-5.4	INSTALL SALVAGED 3-MODULE AIRFIELD GUIDANCE SIGN ON NEW CONCRETI	1	EA
46	L-125-5.5	NEW ELEVATED L-861T(L) LED TAXIWAY EDGE LIGHT AND ISOLATION TRANSF	1	EA

BID ALTERNATE 1

1	C-100	CONTRACTOR QUALITY CONTROL PLAN (CQCP)	1	LS
2	C-102	TEMPORARY POLLUTION, EROSION, AND SILTATION CONTROL	1	LS
3	C-105	MOBILIZATION	1	LS
4	C-106	SAFETY, SECURITY AND MAINTENANCE OF TRAFFIC	1	LS
5	P-152-4.1	EMBANKMENT	18225	CY
6	P-152-4.2	REMOVAL AND REPLACEMENT OF UNSUITABLE MATERIAL (ALLOWANCES)	1	FA

BID ALTERNATE 2

1	C-100	CONTRACTOR QUALITY CONTROL PLAN (CQCP)	1	LS
2	C-102	TEMPORARY POLLUTION, EROSION, AND SILTATION CONTROL	1	LS
3	C-105	MOBILIZATION	1	LS
4	C-106	SAFETY, SECURITY AND MAINTENANCE OF TRAFFIC	1	LS
5	P-101-5.1	COLD MILLING	670	SY
6	P-152-4.1	EMBANKMENT	435	CY
7	P-152-4.2	REMOVAL AND REPLACEMENT OF UNSUITABLE MATERIAL (ALLOWANCES)	1	FA
8	P-154-5.1	6" THICK SUBBASE COURSE	4690	SY
9	P-209-5.1	12" CRUSHED AGGREGATE BASE COURSE	770	CY
10	P-304-8.1	6" THICK CEMENT-TREATED BASE COURSE	4690	SY
11	P-401-8.1	4" THICK BITUMINOUS SURFACE COURSE	535	TON
12	P-501-8.1	17" PORTLAND CEMENT CONCRETE PAVEMENT	4690	SY
13	P-602-5.1	BITUMINOUS PRIME COAT	5	TON
14	P-620-5.1	TAXIWAY PAINTSTRIPING (YELLOW, REFLECTORIZED)	635	SF
15	TSP-1	SOIL STERILANT	6990	SY

BID ALTERNATE 3

1	C-100	CONTRACTOR QUALITY CONTROL PLAN (CQCP)	1	LS
2	C-102	TEMPORARY POLLUTION, EROSION, AND SILTATION CONTROL	1	LS
3	C-105	MOBILIZATION	1	LS
4	C-106	SAFETY, SECURITY AND MAINTENANCE OF TRAFFIC	1	LS
5	P-101-5.1	COLD MILLING	830	SY
6	P-152-4.1	EMBANKMENT	610	CY
7	P-152-4.2	REMOVAL AND REPLACEMENT OF UNSUITABLE MATERIAL (ALLOWANCES)	1	FA
8	P-154-5.1	6" THICK SUBBASE COURSE	6800	SY
9	P-209-5.1	12" CRUSHED AGGREGATE BASE COURSE	810	CY
10	P-304-8.1	6" THICK CEMENT-TREATED BASE COURSE	6800	SY
11	P-401-8.1	4" THICK BITUMINOUS SURFACE COURSE	565	TON
12	P-501-8.1	17" PORTLAND CEMENT CONCRETE PAVEMENT	6800	SY
13	P-602-5.1	BITUMINOUS PRIME COAT	5	TON
14	P-620-5.1	TAXIWAY PAINTSTRIPING (YELLOW, REFLECTORIZED)	720	SF
15	P-620-5.1	EXISTING PAVEMENT MARKING REMOVAL	300	SF
16	TSP-1	SOIL STERILANT	9215	SY

BID ALTERNATE 4

1	C-100	CONTRACTOR QUALITY CONTROL PLAN (CQCP)	1	LS
2	C-102	TEMPORARY POLLUTION, EROSION, AND SILTATION CONTROL	1	LS
3	C-105	MOBILIZATION	1	LS
4	C-106	SAFETY, SECURITY AND MAINTENANCE OF TRAFFIC	1	LS
5	P-101-5.1	COLD MILLING	435	SY
6	P-152-4.1	EMBANKMENT	3330	CY
7	P-152-4.2	REMOVAL AND REPLACEMENT OF UNSUITABLE MATERIAL (ALLOWANCES)	1	FA
8	P-154-5.1	6" THICK SUBBASE COURSE	3755	SY
9	P-209-5.1	12" CRUSHED AGGREGATE BASE COURSE	2320	CY
10	P-304-8.1	6" THICK CEMENT-TREATED BASE COURSE	3755	SY
11	P-401-8.1	4" THICK BITUMINOUS SURFACE COURSE	1620	TON
12	P-501-8.1	17" PORTLAND CEMENT CONCRETE PAVEMENT	3755	SY
13	P-602-5.1	BITUMINOUS PRIME COAT	15	TON
14	P-620-5.1	TAXIWAY PAINTSTRIPING (YELLOW, REFLECTORIZED)	1950	SF
15	P-620-5.1	EXISTING PAVEMENT MARKING REMOVAL	590	SF
16	TSP-1	SOIL STERILANT	10710	SY

A2 APPROXIMATE QUANTITIES
NOT TO SCALE

PER CITY OF PHOENIX CODE CHAPTER 2, SECTION 2-28. THESE PLANS ARE FOR OFFICIAL USE ONLY AND MAY NOT BE SHARED WITH OTHERS EXCEPT AS REQUIRED TO FULFILL THE OBLIGATIONS OF CONTRACTOR'S CONTRACT WITH THE CITY OF PHOENIX.

C&S COMPANIES

Registered Professional Engineer (Civil) CERTIFICATE NO. 33442 LANCE R. McINTOSH Date Signed 02-06-23 ARIZONA, U.S.A.

Expires: 3-31-23

NO.	REVISIONS / SUBMISSIONS	DATE

PER CITY OF PHOENIX CITY CODE CHAPTER 2, SECTION 2-28 THESE PLANS ARE FOR OFFICIAL USE ONLY AND MAY NOT BE SHARED WITH OTHERS EXCEPT AS REQUIRED TO FULFILL THE OBLIGATIONS OF YOUR CONTRACT WITH THE CITY OF PHOENIX

PHX DVT CITY OF PHOENIX AVIATION DEPARTMENT

PHOENIX GOODYEAR AIRPORT
NEW APRON AND TAXIWAY CONNECTOR

AV41000077 FAA/ADOT

Designed by: LM
Drawn by: RB
Checked by: LM
Date: February 2023
Dwg scale: —

CIP NO.(S): AV41000077 FAA/ADOT

Sheet Overview Title

SHEET INDEX AND APPROXIMATE QUANTITIES

Sheet Reference Number:

G002

ABBREVIATION	DEFINITION
3/21	RUNWAY DESIGNATION
A.C.	ASPHALT CONCRETE
ABAN.	ABANDONED
ABC	AGGREGATE BASE COURSE
AC	ASPHALTIC CONCRETE
ADOT	ARIZONA DEPARTMENT OF TRANSPORTATION
AIP	AIRPORT IMPROVEMENT PROGRAM
APPROX.	APPROXIMATE
ASPH.	ASPHALT
ASTM	AMERICAN SOCIETY FOR TESTING MATERIALS
ATCT	AIR TRAFIC CONTROL TOWER
BC	BEGIN CURVE
BLDG.	BUILDING
BM	BENCH MARK
C TO C	CENTER TO CENTER
CIP	CAST IRON PIPE
CL	CENTERLINE
CMP	CORRUGATED METAL PIPE
CMU	CONCRETE MASONRY UNIT
CO	CLEANOUT
CONC.	CONCRETE
COP	CITY OF PHOENIX
CSP	CORRUGATED STEEL PIPE
CU FT	CUBIC FEET
CY	CUBIC YARDS
CZ	CLEAR ZONE
D50	DIAMETER OF 50% ROCK SIZE
DIA.	DIAMETER
DIP	DUCTILE IRON PIPE
E	EAST
EA	EACH
EAPL	EXISTING AIRPORT PROPERTY LINE
EC	END OF CURVE
EG	EXISTING GRADE
ELEC	ELECTRIC/ELECTRICAL
ELEV.	ELEVATION
EOP	EDGE OF PAVEMENT
EX	EXISTING
EXST	EXISTING
FAA	FEDERAL AVIATION ADMINISTRATION
FF	FINISH FLOOR
FG	FINISH GRADE
FIN	FINISHED
FL	FLOW LINE
FND.	FOUNDATION
FS	FINISH SURFACE
FT	FOOT
GA	GENERAL AVIATION
GB	GRADE BREAK
HP	HIGH POINT
ID	INSIDE DIAMETER
IE	INVERT ELEVATION
INT	INTERSECTION
JB	JUNCTION BOX
L	LENGTH
LBS	POUNDS
LF	LINEAL FOOT
LP	LOW POINT
LS	LUMP SUM
LT	LEFT
MAG	MARICOPA ASSOCIATION OF GOVERNMENTS
MAX.	MAXIMUM
MH	MANHOLE
MIN.	MINIMUM
MISC.	MISCELLANEOUS
MUTCD	MANUAL OF UNIFORM TRAFFIC CONTROL DEVICES
N	NORTH
N/A	NOT APPLICABLE
NA	NOT APPLICABLE
NO.	NUMBER
NPI	NON-PAY ITEM
NTS	NOT TO SCALE
OC	ON CENTER
OD	OUTSIDE DIAMETER
OFA	OBJECT FREE AREA
OWS	OIL WATER SEPARATOR
PAV'T.	PAVEMENT
PC	POINT OF CURVATURE
PCC	PORTLAND CEMENT CONCRETE
PI	POINT OF INTERSECTION
PROP	PROPOSED
PT	POINT OF TANGENCY
PVC	POINT OF CURVATURE (VERTICAL CURVE)
PVC	POLYVINYL CHLORIDE
PVC	POLYVINYL CHLORIDE PIPE
PVI	POINT OF VERTICAL INTERSECTION
PVMT	PAVEMENT
PVT	POINT OF TANGENCY (VERTICAL CURVE)
R	RADIUS
RCP	REINFORCED CONCRETE PIPE
REINF	REINFORCING
ROFA	RUNWAY OBJECT FREE AREA
ROW	RIGHT OF WAY
RPZ	RUNWAY PROTECTION ZONE
RSA	RUNWAY SAFETY AREA
RT	RIGHT
RW	RUNWAY
S	SOUTH
S=	SLOPE
SAL	SAFETY AREA LIMITS
SD	STANDARD DETAIL
SD	STORM DRAINAGE
SECT	SECTION
SHDR.	SHOULDER
SHT	SHEET
SICPP	SMOOTH INTERIOR CORRUGATED POLYETHYLENE PIPE
SPECS	SPECIFICATIONS
STA	STATION
SY	SQUARE YARDS
T	TANGENT LENGTH
TC	TOP OF CURB
TF	TOP OF FOOTING
TOFA	TAXIWAY OBJECT FREE AREA
TSA	TAXIWAY SAFETY AREA
TW	TAXIWAY
TYP	TYPICAL
UD	UNDERDRAIN
UG	UNDERGROUND
VCP	VITRIFIED CLAY PIPE
w	WATT
W	WEST
WT	WEIGHT

A1 ABBREVIATIONS
NOT TO SCALE

DESCRIPTION	EXISTING	PROPOSED
PULL BOX	P	P
WATER VALVE	W	W
RUNWAY/TAXIWAY LIGHT		
FLUSH RUNWAY/TAXIWAY LIGHT		
SANITARY SEWER & MANHOLE	S	S
SANITARY SEWER CLEANOUT		
VALLEY GUTTER & MANHOLE	D	D
REFLECTOR		
BRASS CAP FLUSH/IN HAND HOLE		
TELECOMMUNICATIONS HANDHOLE/J-BOX	CJ	CJ
PROPERTY/RIGHT OF WAY LINE		
SECTION LINE		
CENTER/MONUMENT LINE		
EASEMENT		
VERT CURB/CURB & GUTTER		
SIGN		
SINGLE & DOUBLE POST SIGNS		
BOLLARD		
CHAIN LINK FENCE		x
CONTOUR LINES	1125	1125
GRADE BREAK		GB
MONITORING WELL	MW MW	MW MW
MONITORING WELL PIPE	CP	CP
RECLAIMED WATER	RW	
BORE PATCH/WINDOW CUT PATCH	B WC	B WC
DEMO		
BUILDING/STRUCTURE		
AC PAVEMENT		
AC PAVEMENT TRANSITION		
CONCRETE PAVEMENT		
DEMO EXISTING PAVEMENT SECTION		
EROSION CONTROL		
CONSTRUCTION NOTE	1 1 1 1 1	
SURVEY POINTS		1
CONTOUR ELEVATION	xxxx.xx	xxxx.xx
SPOT ELEVATION – ASPHALTIC CONCRETE		xxxx TS
SPOT ELEVATION – ASPHALTIC CONCRETE (MATCH EXISTING)		xxxx TS
FIRE HYDRANT		
FIRE DEPARTMENT CONNECTION		
BACKFLOW PREVENTER		
CATCH BASIN		
ELECTRICAL MANHOLE/CABINET	E	E
TELECOMMUNICATIONS MANHOLE	T	T
ELECTRICAL LINE	E	E
WATER LINE	W	W
TELECOMMUNICATIONS	T	T
STORM DRAIN	SD	SD
SANITARY SEWER	SS	SS
FLAGGER		

A3 LEGEND
NOT TO SCALE

PER CITY OF PHOENIX CODE CHAPTER 2, SECTION 2-28. THESE PLANS ARE FOR OFFICIAL USE ONLY AND MAY NOT BE SHARED WITH OTHERS EXCEPT AS REQUIRED TO FULFILL THE OBLIGATIONS OF CONTRACTOR'S CONTRACT WITH THE CITY OF PHOENIX.

C&S COMPANIES

Registered Professional Engineer (Civil) CERTIFICATE NO. 33442 LANCE R. McINTOSH Date Signed 02-06-23 ARIZONA, U.S.A.
Expires: 3-31-23

PER CITY OF PHOENIX CITY CODE CHAPTER 2, SECTION 2-28 THESE PLANS ARE FOR OFFICIAL USE ONLY AND MAY NOT BE SHARED WITH OTHERS EXCEPT AS REQUIRED TO FULFILL THE OBLIGATIONS OF YOUR CONTRACT WITH THE CITY OF PHOENIX

NO.	REVISIONS / SUBMISSIONS	DATE

PHX DVT
CITY OF PHOENIX AVIATION DEPARTMENT
PHOENIX GOODYEAR AIRPORT
NEW APRON AND TAXIWAY CONNECTOR
AV41000077 FAA/ADOT

Designed by: RB
Drawn by: RB
Checked by: LM
Date: February 2023
Dwg scale: —

CIP NO.(S): AV41000077 FAA/ADOT

Sheet Overview Title
ABBREVIATIONS AND LEGEND

Sheet Reference Number:
G003

GENERAL NOTES:

1. THE CONTRACTOR SHALL COMPLY WITH ALL FEDERAL, STATE AND LOCAL SAFETY REGULATIONS.

2. CONSTRUCTION OF THIS PROJECT SHALL BE IN ACCORDANCE WITH ALL APPLICABLE FEDERAL AVIATION ADMINISTRATION (FAA) STANDARDS AND SPECIFICATIONS, ADOT STANDARDS AND SPECIFICATIONS, CITY OF PHOENIX (COP) SUPPLEMENTARY CONDITIONS, COP SUPPLEMENTS, 2012 MAG UNIFORM STANDARD GOVERNMENTS' (MAG) UNIFORM STANDARD SPECIFICATIONS AND UNIFORM STANDARD DETAILS. IN THE EVENT OF ANY CONFLICT BETWEEN THE CONTRACT DOCUMENTS FOR THIS PROJECT AND THE MAG STANDARD SPECIFICATIONS AND DETAILS AND/OR THE COP SUPPLEMENTS TO THE MAG STANDARDS, THE CONTRACT DOCUMENTS FOR THIS PROJECT SHALL PREVAIL.

   CALCULATED DIMENSIONS WILL GOVERN OVER SCALED DIMENSIONS.

3. THE CONTRACTOR SHALL COMPLY WITH ALL CITY, COUNTY, AND STATE TRAFFIC REGULATIONS CONCERNING THE USE OF STREETS AND ROADWAYS FOR HAULING. ANY DAMAGE DONE TO THE ROADWAYS DUE TO THE CONTRACTOR'S EQUIPMENT OR HAULING OPERATIONS SHALL BE REPAIRED TO THE OWNER'S SATISFACTION AT NO COST TO THE OWNER.

4. THESE PLANS SHOW ITEMS TO BE CONSTRUCTED UNDER THIS CONTRACT. ACTUAL FIELD CONDITIONS, GRADES, LOCATIONS AND OTHER FEATURES MAY DIFFER FROM CONDITIONS INDICATED IN THESE DOCUMENTS.

5. HAUL ROUTES – THE LOCATION OF HAUL ROUTES ON THE AIRPORT SHALL BE SUBMITTED BY THE CONTRACTOR FOR APPROVAL BY THE COP AVIATION DEPARTMENT. IT IS THE CONTRACTOR'S RESPONSIBILITY TO COORDINATE OFF–SITE HAUL ROUTES WITH THE PARTY HAVING JURISDICTION OVER THE AFFECTED ROUTE. ON–SITE HAUL ROUTES WILL BE MAINTAINED BY THE CONTRACTOR AND SHALL BE RESTORED TO THEIR ORIGINAL CONDITION UPON COMPLETION OF BEING USED AS A HAUL ROUTE. FENCING, DRAINAGE, GRADING OR OTHER WORK NECESSARY TO CONSTRUCT HAUL ROUTES ON THE AIRPORT IS THE CONTRACTOR'S RESPONSIBILITY AND MUST BE APPROVED BY THE ENGINEER AND AIRPORT PRIOR TO THE WORK. EXCESS SOILS PLACEMENT – EXCESS SOILS, EXCESS MILLED ASPHALT CONCRETE, CONCRETE, RUBBLE, AND UNSUITABLE EXCAVATION SHALL BE DISPOSED OF OFF–SITE ACCORDING TO LOCAL LAWS AND REGULATIONS. MILLED ASPHALT CONCRETE IS TO BE PLACED IN THE LOCATIONS APPROVED BY THE AIRPORT.

   COSTS ASSOCIATED WITH THESE MATERIALS ARE CONSIDERED INCIDENTAL TO THE CONTRACT. THE CONTRACTOR SHALL PROVIDE WRITTEN DOCUMENTATION TO THE COP AVIATION DEPARTMENT INDICATING THE LOCATION AND QUANTITY OF ANY MATERIAL DISPOSED OF OFF PHOENIX GOODYEAR AIRPORT PROPERTY.

   ANY REMOVAL ITEMS OF VALUE ARE TO REMAIN THE PROPERTY OF THE COP UNLESS OTHERWISE INDICATED. ALL MATERIAL TO BE HAULED OFF–SITE SHALL BE SAMPLED PRIOR TO HAUL OFF. CONTRACTOR TO COORDINATE WITH COP AVIATION PLANNING AND ENVIRONMENTAL PRIOR TO START OF CONSTRUCTION.

6. SALVAGED ITEMS – ANY SALVAGED ITEMS ARE TO REMAIN THE PROPERTY OF AIRPORT.

7. NO MATERIAL SHALL BE WASTED OR STOCKPILED ON THE AIRPORT UNLESS APPROVED BY THE ENGINEER AND AIRPORT. STOCKPILED MATERIAL SHALL BE CONSTRAINED IN A MANNER TO PREVENT MOVEMENT AS A RESULT OF AIRCRAFT OPERATIONS OR WIND AND IN ACCORDANCE WITH FAA ADVISORY CIRCULARS.

8. CONTRACTOR GENERATED DEBRIS, WASTE AND LOOSE MATERIAL CAPABLE OF CAUSING DAMAGE TO AIRCRAFT LANDING GEAR, PROPELLERS AND ROTORS OR OF BEING INGESTED BY JET ENGINES SHALL NOT BE LEFT ON ACTIVE MOVEMENT AREAS. MATERIAL DROPPING WITHIN THESE AREAS SHALL BE REMOVED IMMEDIATELY AND CONTINUOUSLY BY THE CONTRACTOR DURING WORKING HOURS.

9. THE CONTRACTOR SHALL BE RESPONSIBLE FOR THE PRESERVATION OF ALL COP PROPERTY AND SHALL LOCATE AND PROTECT CAREFULLY FROM DAMAGE OR DISTURBANCE ALL HANGARS, BENCHMARKS, LAND MONUMENTS AND PROPERTY MARKERS. IF DAMAGE OR INJURY TO PROPERTY DOES OCCUR DURING THE WORK, THE CONTRACTOR SHALL RESTORE, AT HIS OWN EXPENSE, SUCH PROPERTY TO A CONDITION SIMILAR OR EQUAL TO THAT EXISTING BEFORE SUCH DAMAGE OR INJURY WAS DONE, BY REBUILDING OR RESTORING AS DIRECTED BY THE COP AVIATION DEPARTMENT AND THE ENGINEER.

10. EXISTING AIRPORT SURVEY MONUMENTS ARE LOCATED THROUGHOUT THE CONSTRUCTION AREA. THE CONTRACTOR SHALL AT HIS EXPENSE, HAVE A REGISTERED LAND SURVEYOR REPLACE ANY DISTURBED MONUMENT USING CITY OF PHOENIX STANDARDS. REPLACED MONUMENTS SHALL BE PLACED AT LEAST 10' BUT NOT MORE THAN 50' FROM THE ORIGINAL MONUMENT.

11. CONTRACTOR SHALL ESTABLISH TEMPORARY BENCHMARKS (TBM) ALONG THE PROJECT PRIOR TO BEGINNING ANY CONSTRUCTION REQUIRING LOCATIONS OR GRADES. TBM'S SHALL BE PLACED WHERE THEY WILL NOT BE DISTURBED BY CONSTRUCTION. TBM DATA SHALL BE PROVIDED TO THE ENGINEER AND AIRPORT.

12. SAFETY AND SECURITY – SAFETY AND SECURITY IS THE CONTRACTOR'S RESPONSIBILITY AND SHALL BE COORDINATED WITH THE FAA TOWER PERSONNEL, AIRPORT OPERATIONS, COP AVIATION DEPARTMENT AND THE ENGINEER. SEE SPECIAL CONDITIONS FOR SAFETY, SECURITY, BADGE AND OPERATING REQUIREMENTS OF THE PHOENIX GOODYEAR AIRPORT.

13. THE CONTRACTOR SHALL NOT ENTER ONTO ANY AREA OUTSIDE OF THE CONSTRUCTION LIMITS, STAGING AREA OR DESIGNATED HAUL ROUTES WITHOUT THE WRITTEN APPROVAL BY THE ENGINEER AND AIRPORT.

14. THE CONTRACTOR SHALL NOTIFY THE COP AVIATION DEPARTMENT IN WRITING, THROUGH THE ENGINEER, A MINIMUM OF SEVENTY–TWO (72) HOURS IN ADVANCE TO OBTAIN CLEARANCE FOR WORK. THE CONTRACTOR SHALL SUBMIT A CRITICAL PATH METHOD (CPM) SCHEDULE FOR APPROVAL AT THE PRE–CONSTRUCTION CONFERENCE.

15. THE OWNER RESERVES THE RIGHT TO MAKE REVISIONS TO THE FINISHED ELEVATIONS AND GRADIENTS. IF CHANGES ARE NECESSARY, THE OWNER WILL FURNISH A REVISED GRADING OR PAVING PLAN. UNIT PRICES SHALL GOVERN FOR REVISED QUANTITIES.

16. SPECIFICATIONS ARE PROVIDED WHICH REQUIRE THE CONTRACTOR TO APPLY WATER, CHEMICALS, VEGETATION OR OTHER MATERIALS TO PREVENT THE OCCURRENCE OF DUST WHICH IS OBJECTIONABLE TO THE OPERATIONS OR USERS OF THE AREA. THESE SHALL INCLUDE BUT NOT BE LIMITED TO AIRPORT AUTHORITY OPERATIONS, MAINTENANCE, AIRCRAFT OPERATIONS, AND AIRFIELD OPERATIONS, AND LAND SIDE OPERATIONS. THE CONTRACTOR SHALL ALSO DISCONTINUE OPERATIONS, WHICH VIOLATE EXISTING LAWS AND REGULATIONS OR CREATE A UNIQUE HAZARD TO AIR TRAFFIC. ALL COST FOR CONTROLLING DUST OR POLLUTANTS TO THE AIR OF ANY KIND SHALL BE INCIDENTAL TO THE CONTRACT.

17. EXISTING UTILITY INFORMATION, LIGHTING DUCTS, AND CABLES SHOWN ON THE PLANS CONCERNING THE TYPE, SIZE. AND LOCATION WERE COMPILED BASED ON THE BEST AVAILABLE UTILITY RECORDS TO THE ENGINEER AND AIRPORT, AND ARE APPROXIMATE. THE CONTRACTOR SHALL PROVIDE A UTILITY LOCATOR AND VERIFY THE ACTUAL LOCATION PRIOR TO CONSTRUCTION. IT SHALL BE THE RESPONSIBILITY OF THE CONTRACTOR TO PROTECT ALL EXISTING UTILITIES IN PLACE UNLESS NOTED OTHERWISE OR SPECIFIED. THE OWNER AND ENGINEER BEAR NO RESPONSIBILITY FOR UTILITIES NOT SHOWN ON THE PLANS OR NOT IN THE LOCATION SHOWN ON THE PLANS. ANY AND ALL DAMAGE TO EXISTING UTILITIES SHALL BE REPAIRED AT THE CONTRACTOR'S EXPENSE. EXCAVATION IMMEDIATELY NEAR UTILITIES SHALL BE DONE BY HAND. UTILITIES INTERFERING WITH CONSTRUCTION SHALL BE RESET OR RELOCATED BY THE UTILITY COMPANY CONCERNED UNLESS NOTED OTHERWISE. CONTRACTOR SHALL CONTACT THE FOLLOWING UTILITY COMPANIES AT LEAST SEVENTY–TWO (72) HOURS PRIOR TO BEGINNING CONSTRUCTION:

ARIZONA PUBLIC SERVICE	(602) 371–7171,	CONTACT: FRANK McCUNE
FAA FACILITIES	(602) 305–2532,	CONTACT: ROGER GUSTAFSON
CENTURYLINK	(602) 530–0496,	CONTACT: MICHAEL CARDWELL
COX COMMUNICATIONS	(623) 299–7786	CONTACT: DIANA CARPENTER
GAS (SW GAS)	(602) 484–5344,	CONTACT: VALERIE GALLARDO WELLER
CITY WATER/SEWER	(602) 256–3341,	CONTACT: MARINA SMITH
COP ENVIRONMENTAL	(602) 273–3396,	CONTACT: REBECCA GODLEY
ALL EMERGENCY, FIRE, POLICE, MEDICAL,	911,	CONTACT: OPERATOR
COP COMMUNICATIONS	(602) 359–1955,	CONTACT: CHAD BLOTKAMP
COP UTILITIES	(602) 273–4538,	CONTACT: JAY DuPONT
COP AIRFIELD ELECTRIC	(602) 273–4538,	CONTACT: JAY DuPONT
HALEY ALDRICH	(602) 760–2435,	CONTACT: SUZANNE BELL

18. THE CONTRACTOR SHALL BE RESPONSIBLE TO CONTACT ALL UTILITY OWNERS AND THE PROGRAM MANAGER TO LOCATE ALL EXISTING AND PROPOSED UTILITIES PRIOR TO PERFORMING TRENCHING, MASS EXCAVATION, OR OTHER EARTHWORK.

19. SEVERAL UTILITY OWNERS INCLUDING THE COP AVIATION DEPARTMENT, SOLID WASTE MANAGEMENT DEPARTMENT, HUMAN SERVICES DEPARTMENT, FEDERAL AVIATION ADMINISTRATION, AIR NATIONAL GUARD, AND OTHERS ARE NOT MEMBERS OF THE BLUE STAKE CENTER NOTIFICATION SYSTEM AND MUST BE NOTIFIED INDIVIDUALLY. CONTRACTOR TO USE A THIRD PARTY UTILITY LOCATOR.

20. THE CONTRACTOR SHALL FIELD VERIFY ALL EXISTING UTILITIES AND ELECTRICAL SYSTEMS TO REMAIN PRIOR TO COMMENCING ANY DRAINAGE EXCAVATION.

21. POWER, CONTROL CABLES AND FIXTURES FOR AIRFIELD LIGHTING AND NAVIGATIONAL AIDS ARE LOCATED IN THE CONSTRUCTION AREAS. THE CONTRACTOR'S PERSONNEL SHALL BECOME FAMILIAR WITH THESE CABLE AND FIXTURE LOCATIONS AND KEEP VEHICLES AND EQUIPMENT CLEAR OF THEM AT ALL TIMES. ADHERENCE TO AVIATION LOCKOUT/TAGOUT PROCEDURES SHALL BE STRICTLY ENFORCED.

22. ANY DAMAGE TO THE EXISTING AIRPORT LIGHTING SYSTEM CAUSED BY CONSTRUCTION OPERATIONS SHALL BE IMMEDIATELY NOTED TO THE OWNER AND REPAIRED BY THE CONTRACTOR AT ITS OWN EXPENSE.

23. THE CONTRACTOR SHALL MAINTAIN ACCESS TO ALL FIRE HYDRANTS AT ALL TIMES.

24. THE CONTRACTOR SHALL NOT DRAW WATER FROM ANY FIRE HYDRANT FOR USE ON THE WORK WITHOUT FIRST OBTAINING A WRITTEN PERMIT FROM THE CONTROLLING FIRE DEPARTMENT.

25. THE CONTRACTOR WILL BE REQUIRED TO COORDINATE WITH THE COP AVIATION DEPARTMENT ON THE PRECISE LOCATION AND LIMITS OF THE STAGING AREA, AS WELL AS ANY SPECIAL REQUIREMENTS FOR FENCING, SECURITY OR ACCESS. IT IS THE CONTRACTOR'S RESPONSIBILITY TO PROVIDE ALL UTILITIES AND HOOKUPS NECESSARY FOR THE CONTRACTOR'S USE AND FOR ALL PROJECT FIELD OFFICES AS REQUIRED IN THE SPECIAL PROVISIONS.

26. THE EXACT LIMITS, LIGHTING, AND SECURITY REQUIREMENTS OF THE CONTRACTOR'S STAGING AND STORAGE AREA SHALL BE ESTABLISHED BY THE CONTRACTOR WITH THE APPROVAL OF THE ENGINEER AND AIRPORT IN THE AREAS GENERALLY AS SHOWN ON THE PLANS. ANY AND ALL REQUIRED UTILITIES FOR THE CONTRACTOR'S OPERATIONS SHALL BE ARRANGED FOR AND PAID FOR BY THE CONTRACTOR AND PAID DIRECTLY TO THE APPROPRIATE UTILITY. UTILITY ARRANGEMENTS SHALL BE SUBJECT TO THE APPROVAL OF THE ENGINEER AND AIRPORT. THE CONTRACTOR SHALL USE THE STORAGE AND STAGING AREAS SHOWN ON THE PLANS FOR HIS/HER SHOP, MATERIAL AND EQUIPMENT STORAGE AND OTHER PROJECT RELATED ACTIVITIES. ALL COSTS ASSOCIATED WITH PREPARING THE STORAGE AND STAGING AREA SITE SHALL BE BORNE BY THE CONTRACTOR. THIS INCLUDES BUT IS NOT LIMITED TO CLEARING AND GRADING OF THE SITE, CONSTRUCTION OF ALL TEMPORARY UTILITIES, ACCESS ROADS, ALL SECURITY FENCING, CLEAN–UP AND RESTORATION OF SITE TO ORIGINAL CONDITION.

27. THE CONTRACTOR SHALL SUBMIT A DRAWING SHOWING THE PROPOSED SITE LAYOUT OF ANY BATCH PLANTS. THE PLAN SHALL BE APPROVED BY THE ENGINEER AND AIRPORT PRIOR TO STARTING ANY WORK AT THE CONTRACTOR'S STAGING AREA.

28. THE CONTRACTOR SHALL INVESTIGATE THE AVAILABILITY OF AN ADEQUATE SUPPLY OF SUITABLE WATER, MAKE ALL ARRANGEMENTS (PERMITS) FOR THE PURCHASE OF THE WATER, AND PROVIDE NECESSARY FACILITIES TO FURNISH WATER FOR USE DURING CONSTRUCTION, SOLELY AT HIS EXPENSE.

29. BATCH PLANT SITES AND OTHER AREAS USED DURING CONSTRUCTION ARE TO BE RESTORED TO THEIR ORIGINAL CONDITION UPON COMPLETION OF THE PROJECT AT NO COST TO THE OWNER.

30. THE CONTRACTOR SHALL COMPLETE CLEAN UP AND RESTORATION OF ENTIRE PROJECT AREA, INCLUDING STAGING AND STORAGE AREAS, AS APPROVED BY THE ENGINEER AND AIRPORT WITHIN 15 DAYS OF CONTRACT COMPLETION DATE.

31. THE CONTRACTOR IS RESPONSIBLE FOR ALL TEMPORARY ELECTRICAL TIE–OVERS THAT WILL BE REQUIRED TO KEEP TAXIWAY EDGE LIGHTS AND SIGNS IN OPERATION AT ALL TIMES WHEN THE PAVEMENT AREAS ARE AVAILABLE TO AIRCRAFT TRAFFIC.

32. THE CONTRACTOR SHALL CONDUCT THE FINAL CLEANING OF AFFECTED AIRPORT PAVEMENTS PRIOR TO REOPENING THE PAVEMENTS TO AIR TRAFFIC. CONTRACTOR TO PROTECT ALL EXISTING UTILITY VAULTS AND LIDS DURING CONSTRUCTION. CONTRACTOR SHALL ENSURE THAT ALL VAULT LIDS ARE OPERATIONAL FOLLOWING COMPLETION OF CONSTRUCTION. THE CONTRACTOR IS RESPONSIBLE FOR CONTINUOUS DAILY CLEAN UP OF HIS/HER WORK AREA. THE CONTRACTOR SHALL CONDUCT POWER VACUUM CLEANING OF AFFECTED AIRPORT PAVEMENTS PRIOR TO REOPENING EACH PHASE OF THE PAVEMENTS TO AIR TRAFFIC, AND FOR ACTIVE TAXIWAYS AND RUNWAYS IMMEDIATELY FOLLOWING ANY ACCESS ONTO OR CROSSING OF THE PAVEMENT BY CONSTRUCTION TRAFFIC.

33. THE CONTRACTOR IS REQUIRED TO PROVIDE LIGHTING FOR CONSTRUCTION DURING THE HOURS OF DARKNESS AS REQUIRED TO PERFORM CONSTRUCTION AND RELATED ACTIVITIES. COSTS FOR LIGHTING SHALL BE INCIDENTAL TO THE CONTRACT.

34. THE CONTRACTOR'S SUPERINTENDENT SHALL BE ON THE CONSTRUCTION SITE AT ALL TIMES DURING WORKING HOURS WHILE THIS PROJECT IS IN PROGRESS. THE CONTRACTOR'S SUPERINTENDENT SHALL BE THE DESIGNATED RESPONSIBLE CONTRACTOR REPRESENTATIVE AND SHALL BE AVAILABLE IN CASE OF EMERGENCIES ON A 24–HOUR DAILY BASIS.

35. MOST CONSTRUCTION WORK IN THIS PROJECT WILL OCCUR WITHIN THE AIR OPERATIONS AREA (AOA) AND IS SUBJECT TO OPERATIONAL SAFETY AND SECURITY REQUIREMENTS OF THE COP AND FAA. ANY ADDITIONAL REQUIREMENTS AS MAY BE DEEMED NECESSARY BY THE COP, GOODYEAR AIRPORT MANAGEMENT OR THE FAA WILL BE COMPLIED WITH BY THE CONTRACTOR AT NO COST TO THE OWNER.

36. THE CONTRACTOR SHALL BE RESPONSIBLE FOR TRANSPORTING EMPLOYEES TO AND FROM THE PROJECT SITE IF NECESSARY.

37. ROADS USED AS CONTRACTOR ROUTES MAY BE USED BY OTHER AIRPORT VEHICLES. THE CONTRACTOR SHALL NOT INTERFERE WITH OTHER VEHICLE TRAFFIC AND SHALL YIELD TO EMERGENCY VEHICLES ALONG ANY OF THE AIRPORT OR PUBLIC ROADS.

38. EACH CONTRACTOR/SUBCONTRACTOR, INCLUDING EACH CONTRACTOR/SUBCONTRACTOR EMPLOYEE, WHO OPERATES A GROUND VEHICLE ON ANY PORTION OF THE AOA AT THE AIRPORT MUST BE FAMILIAR WITH:

   - GOODYEAR AIRPORT RULES AND REGULATIONS.
   - GOODYEAR AIRPORT PROCEDURES FOR THE OPERATION OF GROUND VEHICLES.
   - THE CONSEQUENCES OF NON–COMPLIANCE WITH THE GOODYEAR AIRPORT RULES AND REGULATIONS AND/OR PROCEDURES FOR THE OPERATION OF GROUND VEHICLES, AND MUST ATTEND A MOVEMENT AREA OPERATING PROCEDURES CLASS
   - ALL CONTRACTOR VEHICLES, INCLUDING HAULING VEHICLES, CONSTRUCTION EQUIPMENT (IE. ROLLERS. BACKHOES, SCRAPERS, ETC.) THAT ARE AUTHORIZED TO OPERATE ON THE AIRPORT WITHIN THE DESIGNATED LIMITS OF CONSTRUCTION OR HAUL ROUTES, SHALL DISPLAY IN FULL VIEW ABOVE THE VEHICLE A 3'X3' OR LARGER ORANGE AND WHITE CHECKERBOARD FLAG, EACH CHECKERBOARD COLOR BEING 1' SQUARE, WHEN OPERATING DURING PERIODS OF DARKNESS OR LIMITED VISIBILITY, CONTRACTOR'S VEHICLES SHALL BE EQUIPPED WITH ROTATING OR FLASHING AMBER LIGHTS. DURING SUCH PERIODS, HAULING VEHICLES NOT SO EQUIPPED SHALL BE ESCORTED BY A VEHICLE SO SUPPLIED.

39. ALL VEHICLES AND EQUIPMENT SHALL BE KEPT WITHIN THE WORK AREAS ESTABLISHED FOR EACH WORKSHIFT UNLESS TRAVELING TO OR FROM THE SITE. ALL VEHICLES AND EQUIPMENT SHALL BE PARKED IN STAGING AREAS AS APPROVED BY THE ENGINEER AND AIRPORT.

40. CONTRACTOR SHALL PROVIDE TRAINED FLAGMEN TO COORDINATE AND CONTROL CONSTRUCTION TRAFFIC WHEN OPERATING ACROSS ANY ACTIVE TAXIWAY. FLAGMEN SHALL BE EQUIPPED WITH RADIOS ON GROUND CONTROL FREQUENCY AND SHALL ALLOW TRAFFIC CROSSINGS ON ACTIVE TAXIWAYS AND RUNWAYS ONLY UPON SPECIFIC AUTHORIZATION BY AIR TRAFFIC CONTROL. FLAGMEN SHALL ALSO BE PROVIDED FOR CONTROLLING EQUIPMENT ENTERING AND LEAVING THE PROJECT AREA.

41. THE CONTRACTOR SHALL AT NO TIME CROSS AN ACTIVE RUNWAY OR TAXIWAY UNLESS ESCORTED BY A COP RADIO ESCORT. VIOLATION COULD RESULT IN PERMANENT EJECTION FROM THE AIRPORT PROPERTY AND/OR THE ASSESSMENT OF FINES.

42. CONTRACTOR ACCESS GATE SHALL BE MANNED BY A CONTRACTOR SUPPLIED GATE GUARD OR REMAIN LOCKED AT ALL TIMES (WHEN NOT OCCUPIED). APPROVED GATE GUARD SHALL CONTROL ACCESS TO ALLOW ONLY AUTHORIZED CONSTRUCTION TRAFFLC TO ENTER THE SITE.

43. CONSTRUCTION EQUIPMENT SHALL NOT PENETRATE THE HEIGHT RESTRICTIONS FOR FAR PART 77.

44. ALL SURFACE RUNOFF FROM THE STAGING AREA OR THE AREAS UNDER CONSTRUCTION SHALL BE COLLECTED AND ADEQUATELY FILTERED BEFORE DISCHARGE INTO THE EXISTING DRAINAGE SYSTEM. CONTRACTOR SHALL MITIGATE THE IMPACTS OF RUNOFF FROM THE SITE IN CONFORMANCE WITH THE SPECIFICATIONS.

45. NO ADJUSTMENT FOR ADDITIONAL COMPENSATION AND TIME WILL BE MADE FOR TIME LOST IN WORK AREAS CONTIGUOUS TO TAXIWAYS AND RUNWAYS DUE TO AIRCRAFT TRAFFIC.

46. CONTRACTOR SHALL NOTE IN THE RECORD DRAWINGS ANY AND ALL PIPES, DUCTS AND CABLES FOUND DURING EXCAVATION. INDICATE EXACT POSITION, ELEVATION, DIRECTION, SIZE, MATERIAL, PURPOSE AND ACTIVE STATUS, IF KNOWN.

47. PIPE SUPPORTS ACROSS TRENCHES SHALL CONFORM TO MAG STD. DET. 403. TEMPORARY SEWER PIPE MAY BE D.I.P. OR H.D.P.E. PER MAG STD. SPECIFICATIONS. TEMPORARY WATER PIPE MAY BE D.I.P. OR A.W.W.A C900 CLASS 150 P.V.C.

48. ANY PAINT USED FOR NEW PAVEMENT MARKINGS SHALL BE LEAD FREE CERTIFIED. CONTRACTOR TO PROVIDE MATERIAL SAFETY DATA SHEET TO THE AIRPORT FOR APPROVAL PRIOR TO CONSTRUCTION.

49. BEFORE ANY WORK COMMENCES, AN ASBESTOS/LEAD PAINT SURVEY NEEDS TO BE COMPLETED. THE CONTRACTOR SHALL CONTACT TARIQ ABDELLATIF AT 602–273–4081 APPROXIMATELY 3–4 WEEKS PRIOR TO CONSTRUCTION ACTIVITIES TO HAVE THE ASBESTOS SURVEY DONE. ANY ENVIRONMENTAL HAZARDS FOUND DURING THIS SURVEY SHALL BE ABATED PRIOR TO ANY DISTURBANCE. CONTRACTOR TO ALSO NOTIFY CHRISTINA BROWNING OF ANY CONCRETE FOUND DURING CONSTRUCTION. CONTRACTOR TO COORDINATE TESTING OF EXISTING CONCRETE FOUND PRIOR TO OR DURING CONSTRUCTION. CONTRACTOR SHALL ASSUME CONCRETE CONTAINS ASBESTOS UNLESS OTHERWISE NOTIFIED.

50. IF SOIL IS TO BE REMOVED FROM THE AIRPORT, THEN PRIOR TO ANY WORK COMMENCING, SOIL SAMPLING NEEDS TO BE COMPLETED. THE CONTRACTOR SHALL CONTACT REBECCA GODLEY AT 602–273–3396 APPROXIMATELY 3–4 WEEKS PRIOR TO CONSTRUCTION ACTIVITIES TO HAVE THE SOIL SAMPLING COMPLETED. THE SOIL SHALL BE SAMPLED BY COP ENVIRONMENTAL ON–CALL CONSULTANTS WITH ASSISTANCE FROM THE CONTRACTOR. CONTRACTOR SHALL PROVIDE BARRICADES, COMMUNICATE WITH OPERATIONS AND REPLACE THE CORED AREA AFTER SAMPLING IS COMPLETE PER AIRPORT SPECIFICATIONS.

51. THE PROJECT WILL DISTURB MORE THAN 1/10 OF AN ACRE. THE CONTRACTOR SHALL OBTAIN A MARICOPA COUNTY DUST CONTROL PERMIT PRIOR TO CONSTRUCTION.

52. THE CONTRACTOR SHALL OBTAIN A CONSTRUCTION GENERAL PERMIT FROM ADEQ AND IMPLEMENT A STORM WATER POLLUTION PREVENTION PLAN (SWPPP).

53. ANY WASTE OR CONSTRUCTION DEBRIS MUST BE DISPOSED OF PROPERLY. THE DISPOSAL OF MATERIAL OFF–SITE SHALL BE DONE IN A LAWFUL MANNER AND AT A SITE HAVING CURRENT APPROVAL TO ACCEPT SOLID WASTE FOR DISPOSAL.

54. CONTRACTOR TO OBTAIN PERMIT FROM THE WATER DEPARTMENT TO ACCESS STORM DRAINS, STORM DRAIN MANHOLES, AND SANITARY SEWER MANHOLES IF REQUIRED.

55. SERVICE ROAD ACCESS SHALL BE MAINTAINED AT ALL TIMES. ALIGNMENT FOR SERVICE ROAD DETOURS SHALL BE APPROVED BY AIRPORT OPERATIONS AND SECURITY.

A1 GENERAL NOTES
NOT TO SCALE

C&S COMPANIES

Registered Professional Engineer (Civil) CERTIFICATE NO. 33442 LANCE R. McINTOSH Date Signed 02-28-23 ARIZONA, U.S.A.

Expires: 3–31–23

NO.	REVISIONS / SUBMISSIONS	DATE

PER CITY OF PHOENIX CITY CODE CHAPTER 2, SECTION 2-28 THESE PLANS ARE FOR OFFICIAL USE ONLY AND MAY NOT BE SHARED WITH OTHERS EXCEPT AS REQUIRED TO FULFILL THE OBLIGATIONS OF YOUR CONTRACT WITH THE CITY OF PHOENIX

PHX DWT CITY OF PHOENIX AVIATION DEPARTMENT
PHOENIX GOODYEAR AIRPORT
NEW APRON AND TAXIWAY CONNECTOR
AV41000077 FAA/ADOT

Designed by: LM
Drawn by: RB
Checked by: LM
Date: February 2023
Dwg scale: —
CIP NO.(S): AV41000077 FAA/ADOT

Sheet Overview Title
GENERAL NOTES

Sheet Reference Number:
G004

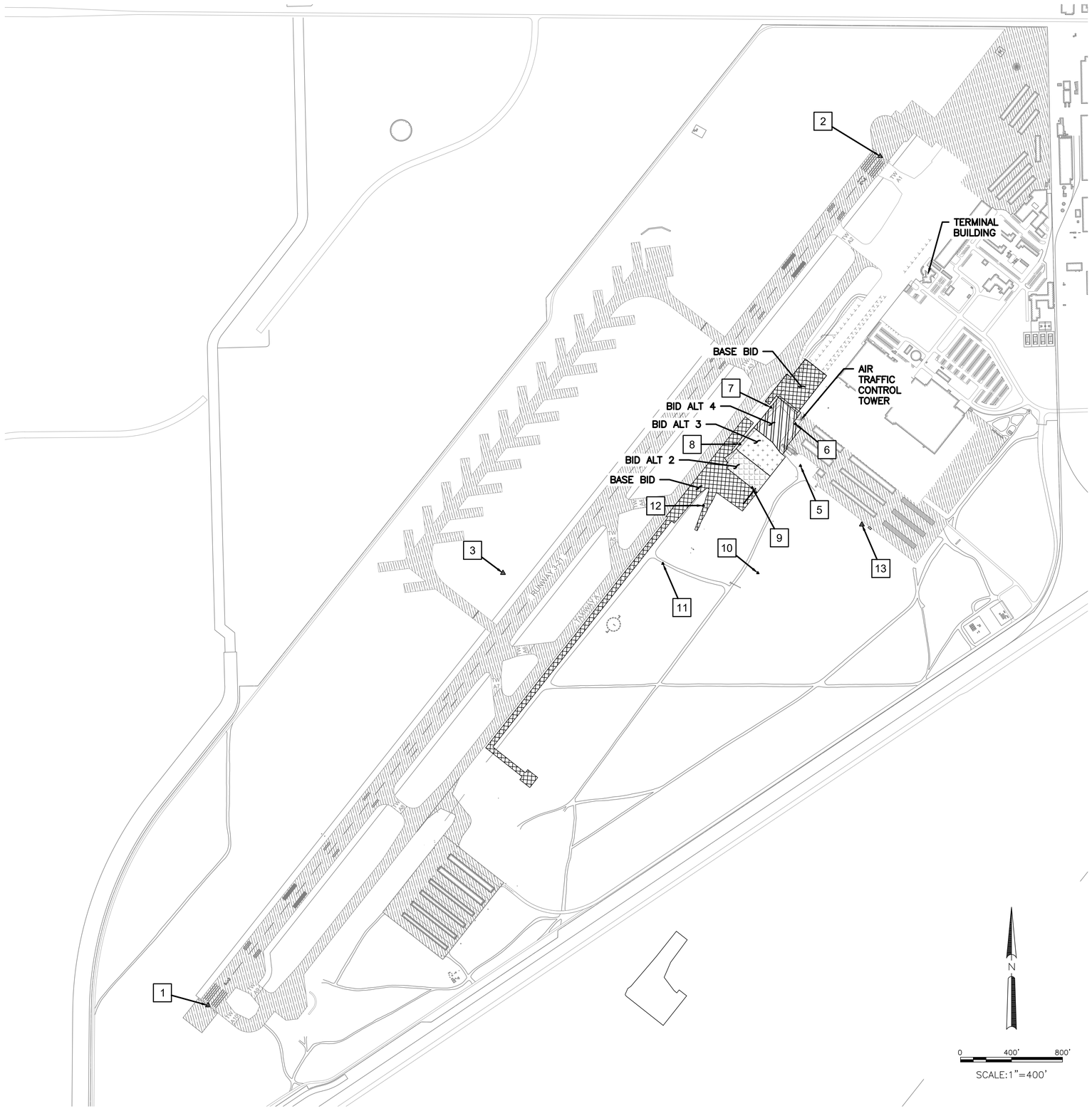

A1 SURVEY CONTROL PLAN

SCALE 1" = 400'

SURVEY CONTROL POINTS

PT #	NORTHING	EASTING	ELEVATION	DESCRIPTION
1	878617.3520	557481.1470	942.49	BRASS CAP RW 3 END
2	885283.9050	562754.5240	968.75	BRASS CAP RW 21 END
3	882011.8030	559795.3290	956.52	CONTROL POINT
5	882853.7540	562129.3070	956.18	GY 5
6	883184.1390	562089.7990	956.07	CONTROL POINT
7	883312.0210	561897.2290	954.15	CONTROL POINT
8	883023.9080	561653.8940	953.32	CONTROL POINT
9	882681.2840	561751.1590	957.20	CONTROL POINT
10	882011.9950	561795.3050	950.06	GY 06
11	882085.5410	561050.0810	949.87	CONTROL POINT
12	882541.7020	561368.1670	950.35	CONTROL POINT
13	882392.0750	562611.7050	961.32	CONTROL POINT

NOTE:
1. CONTRACTOR SHALL PROTECT ALL CONTROL POINTS AND SURVEY MONUMENTS.
2. BID ALTERNATE 1 NOT SHOWN FOR CLARITY BUT INCLUDES THE INTERIM GRADING OF ALL OF BID ALTERNATE 2, 3 AND 4 AREAS.

C4 CONTROL POINTS

NOT TO SCALE

HORIZONTAL AND VERTICAL DATUM:

NAD 83 (1992 EPOCH) STATE PLANE GROUND COORDINATES, ARIZONA CENTRAL ZONE, USING A GRID TO GROUND ADJUSTMENT FACTOR OF 1.00012, FROM AIRPORT SURVEY CONTROL POINTS 5 (GY-06) AND 8 (GY-10).

A4 SURVEY SUPPORTING INFORMATION

NOT TO SCALE

PER CITY OF PHOENIX CODE CHAPTER 2, SECTION 2-28. THESE PLANS ARE FOR OFFICIAL USE ONLY AND MAY NOT BE SHARED WITH OTHERS EXCEPT AS REQUIRED TO FULFILL THE OBLIGATIONS OF CONTRACTOR'S CONTRACT WITH THE CITY OF PHOENIX.

C&S COMPANIES

Registered Professional Engineer (Civil) CERTIFICATE NO. 33442 LANCE R. McINTOSH Date Signed 02-06-23 ARIZONA, U.S.A.

Expires: 3-31-23

PER CITY OF PHOENIX CITY CODE CHAPTER 2, SECTION 2-28. THESE PLANS ARE FOR OFFICIAL USE ONLY AND MAY NOT BE SHARED WITH OTHERS EXCEPT AS REQUIRED TO FULFILL THE OBLIGATIONS OF YOUR CONTRACT WITH THE CITY OF PHOENIX.

NO.	REVISIONS / SUBMISSIONS	DATE

PHX DVT CYR

CITY OF PHOENIX AVIATION DEPARTMENT

PHOENIX GOODYEAR AIRPORT
NEW APRON AND TAXIWAY CONNECTOR

AV41000077 FAA/ADOT

Designed by: RB
Drawn by: RB
Checked by: LM
Date: February 2023
Dwg scale: —

CIP NO.(S): AV41000077 FAA/ADOT

Sheet Overview Title

GENERAL PLAN AND SURVEY CONTROL

Sheet Reference Number:

V101

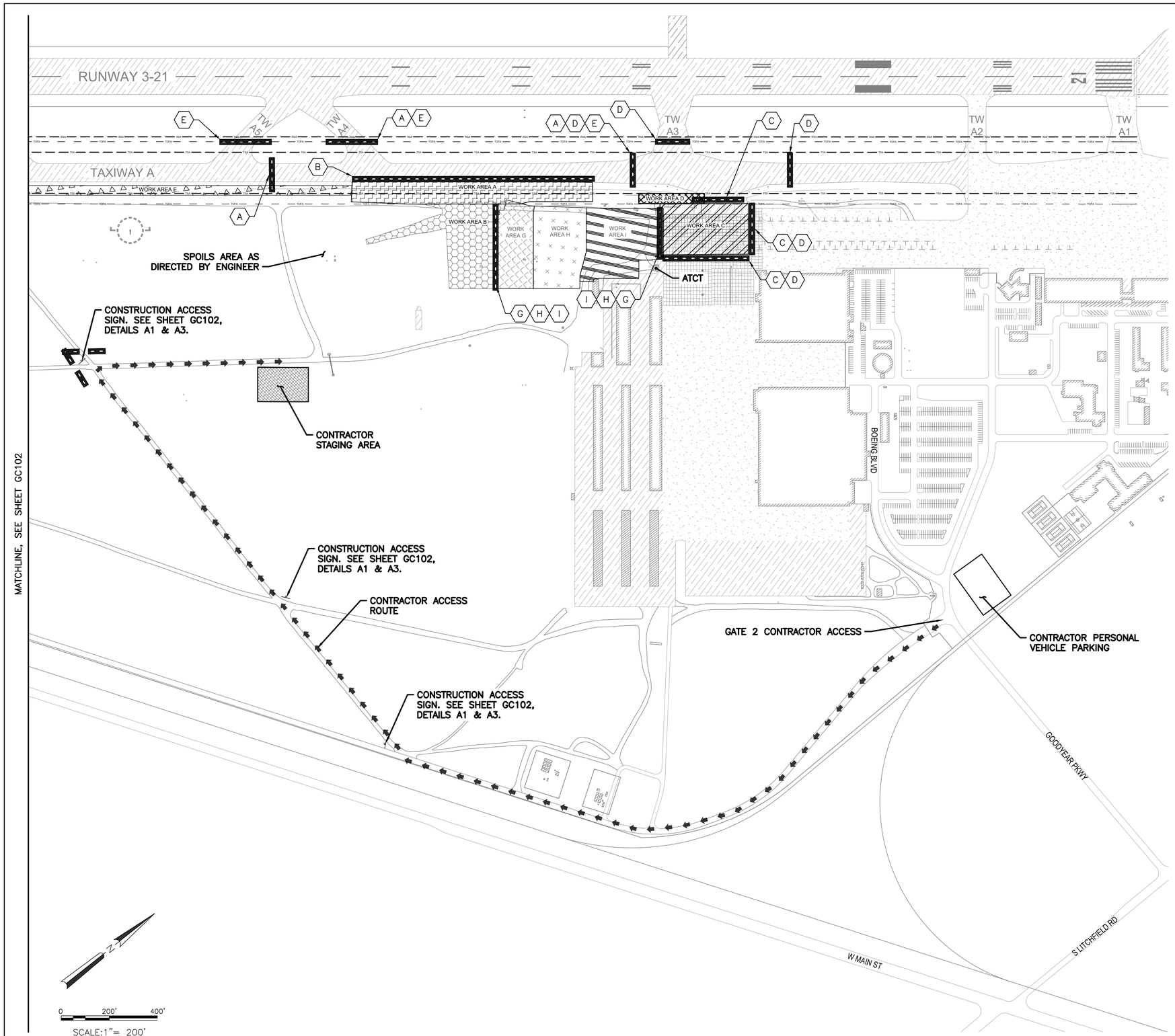

A1 CONSTRUCTION SAFETY PHASING PLAN

SCALE: 1" = 200'

WORK AREA A
WORK AREA B
WORK AREA C
WORK AREA D
WORK AREA E
WORK AREA G
WORK AREA H
WORK AREA I

X — INDICATES BARRICADE PLACEMENT PER WORK AREA

LOW PROFILE BARRICADES – FULL INTERLOCKED. SEE DETAIL A4, THIS SHEET.

LOW PROFILE BARRICADES – 5' SPACED. SEE DETAIL A4, THIS SHEET.

CONTRACTOR ACCESS ROUTE

D4 LEGEND

NOT TO SCALE

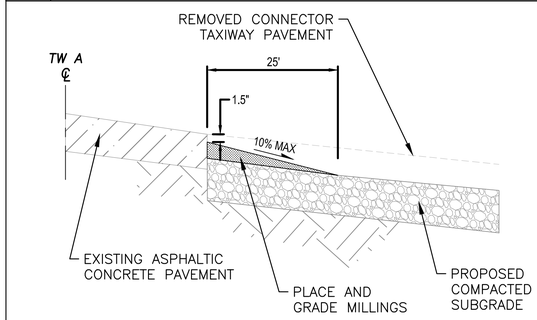

C4 TEMPORARY RAMP DETAIL

NOT TO SCALE

SEE CONSTRUCTION SAFETY AND PHASING PLAN IN SPECIFICATIONS FOR DETAILS ON CONSTRUCTION PHASING.

B4 GENERAL NOTES

NOT TO SCALE

BARRICADE NOTES:

1. BARRICADES SHALL BE INTERLOCKED OR SPACED 5' APART, PER PLAN.
2. THE CONTRACTOR SHALL BE RESPONSIBLE FOR MAINTAINING PROPER POSITIONING OF ALL BARRICADES.
3. WATER–FILLED TYPE BARRICADES SHALL BE USED (SEE SPECIFICATIONS)
4. BARRICADES SHALL HAVE TWO FLASHING LAMPS.

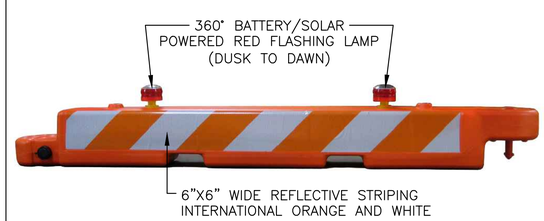

A4 LOW PROFILE SAFETY BARRICADE DETAIL

NOT TO SCALE

PER CITY OF PHOENIX CODE CHAPTER 2, SECTION 2-28. THESE PLANS ARE FOR OFFICIAL USE ONLY AND MAY NOT BE SHARED WITH OTHERS EXCEPT AS REQUIRED TO FULFILL THE OBLIGATIONS OF CONTRACTOR'S CONTRACT WITH THE CITY OF PHOENIX.

C&S COMPANIES

Registered Professional Engineer (Civil) CERTIFICATE NO. 33442 LANCE R. McINTOSH Date Signed 02-28-23 ARIZONA, U.S.A.

Expires: 3–31–23

NO.	REVISIONS / SUBMISSIONS	DATE

PER CITY OF PHOENIX CITY CODE CHAPTER 2, SECTION 2-28 THESE PLANS ARE FOR OFFICIAL USE ONLY AND MAY NOT BE SHARED WITH OTHERS EXCEPT AS REQUIRED TO FULFILL THE OBLIGATIONS OF YOUR CONTRACT WITH THE CITY OF PHOENIX

PHX AVIATION

CITY OF PHOENIX AVIATION DEPARTMENT

PHOENIX GOODYEAR AIRPORT
NEW APRON AND TAXIWAY CONNECTOR

AV41000077 FAA/ADOT

Designed by: NM
Drawn by: RB
Checked by: LM
Date: February 2023
Dwg. scale: —

CIP NO.(S): AV41000077 FAA/ADOT

Sheet Overview Title

CONSTRUCTION SAFETY PHASING PLAN

Sheet Reference Number:

GC101

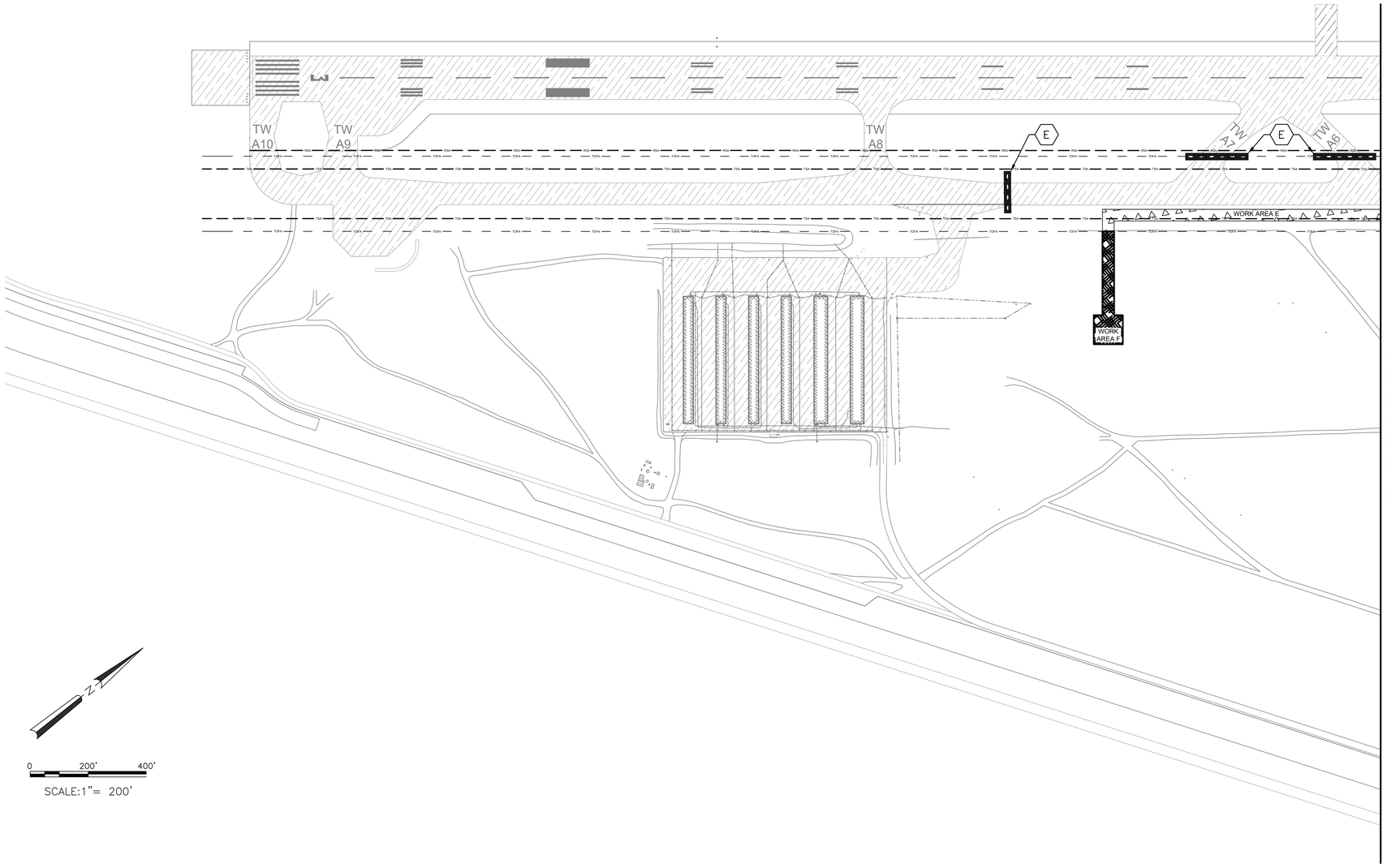

B1 CONSTRUCTION SAFETY PHASING PLAN

SCALE: 1" = 200'

WORK AREA E

WORK AREA F

INDICATES BARRICADE PLACEMENT PER WORK AREA

LOW PROFILE BARRICADES – FULL INTERLOCKED. SEE DETAIL A4, SHEET GC101.

D4 LEGEND

NOT TO SCALE

B4 GENERAL NOTES

NOT TO SCALE

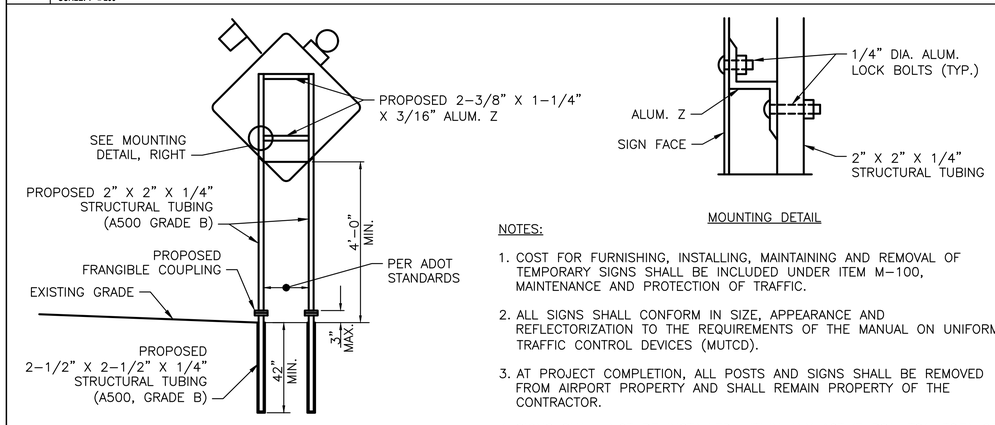

MOUNTING DETAIL

NOTES:

1. COST FOR FURNISHING, INSTALLING, MAINTAINING AND REMOVAL OF TEMPORARY SIGNS SHALL BE INCLUDED UNDER ITEM M–100, MAINTENANCE AND PROTECTION OF TRAFFIC.
2. ALL SIGNS SHALL CONFORM IN SIZE, APPEARANCE AND REFLECTORIZATION TO THE REQUIREMENTS OF THE MANUAL ON UNIFORM TRAFFIC CONTROL DEVICES (MUTCD).
3. AT PROJECT COMPLETION, ALL POSTS AND SIGNS SHALL BE REMOVED FROM AIRPORT PROPERTY AND SHALL REMAIN PROPERTY OF THE CONTRACTOR.
4. SIGNS SHALL NOT BE INSTALLED WITHIN ANY ACTIVE RSA, TSA, TOFA OR ROFA.

A1 TEMPORARY CONSTRUCTION SIGN ASSEMBLY DETAIL

NOT TO SCALE

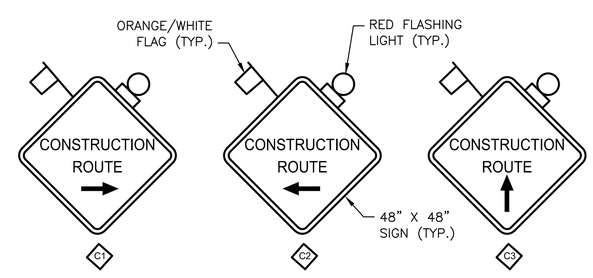

SIGN NOTES:

1. SIGN BACKGROUND IS TO BE WHITE. SIGN LETTERING IS TO BE BLACK, MINIMUM HEIGHT OF 3", AND BE A BOLD LETTERING STYLE SIMILAR TO DETAIL SHOWN ON THIS SHEET.
2. SIGN SHALL BE LOCATED HIGH ENOUGH TO ALLOW EASY VIEWING FROM ALL CONSTRUCTION VEHICLES ENTERING THE CONSTRUCTION SITE.
3. SEE DRAWINGS GC101 FOR GENERAL LOCATIONS. THE CONTRACTOR SHALL COORDINATE THE EXACT PLACEMENT AND LOCATION OF ALL CONSTRUCTION TRAFFIC SIGNS WITH THE ENGINEER.
4. SEE DETAIL A1, THIS SHEET FOR SIGN MOUNTING/ASSEMBLY.
5. ALL COSTS FOR PROVIDING, INSTALLING, MAINTAINING, AND REMOVAL OF TEMPORARY SIGNS SHALL BE INCLUDED UNDER ITEM M–100.

A3 TEMPORARY CONSTRUCTION SIGN DETAIL

NOT TO SCALE

C&S COMPANIES

Registered Professional Engineer (Civil) CERTIFICATE NO. 33442 LANCE R. McINTOSH Date Signed 02-06-23 ARIZONA, U.S.A.

Expires: 3–31–23

PER CITY OF PHOENIX CODE CHAPTER 2, SECTION 2-28. THESE PLANS ARE FOR OFFICIAL USE ONLY AND MAY NOT BE SHARED WITH OTHERS EXCEPT AS REQUIRED TO FULFILL THE OBLIGATIONS OF YOUR CONTRACT WITH THE CITY OF PHOENIX.

NO.	REVISIONS / SUBMISSIONS	DATE

PHX DVT CYR

CITY OF PHOENIX AVIATION DEPARTMENT

PHOENIX GOODYEAR AIRPORT

NEW APRON AND TAXIWAY CONNECTOR

AV41000077 FAA/ADOT

Designed by: NM
Drawn by: RB
Checked by: LM
Date: February 2023
Dwg scale: —

CIP NO.(S): AV41000077 FAA/ADOT

Sheet Overview Title

CONSTRUCTION SAFETY PHASING PLAN

Sheet Reference Number:

GC102

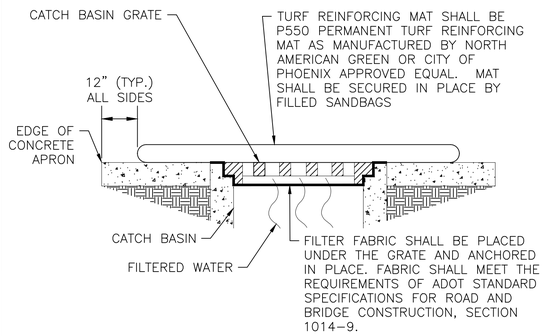

D1 STORM DRAIN INLET PROTECTION
NOT TO SCALE

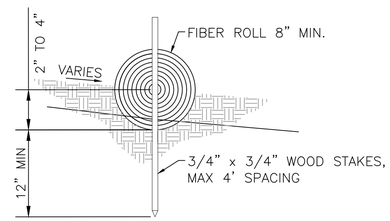

D2 TYPE 1 FIBER ROLL DETAIL
NOT TO SCALE

FIBER ROLL SILT PROTECTION
DISTURBED SOIL LIMITS
PROPOSED MAJOR/MINOR CONTOUR
EXISTING MAJOR/MINOR CONTOUR

D3 LEGEND
NOT TO SCALE

1. CATCH BASIN INLET PROTECTION, SEE DETAIL D1, THIS SHEET. (BASE BID) ITEM C-102.
2. FIBER ROLL SILT PROTECTION, SEE DETAIL D2, THIS SHEET. (BASE BID) ITEM C-102.

D4 CONSTRUCTION NOTES
NOT TO SCALE

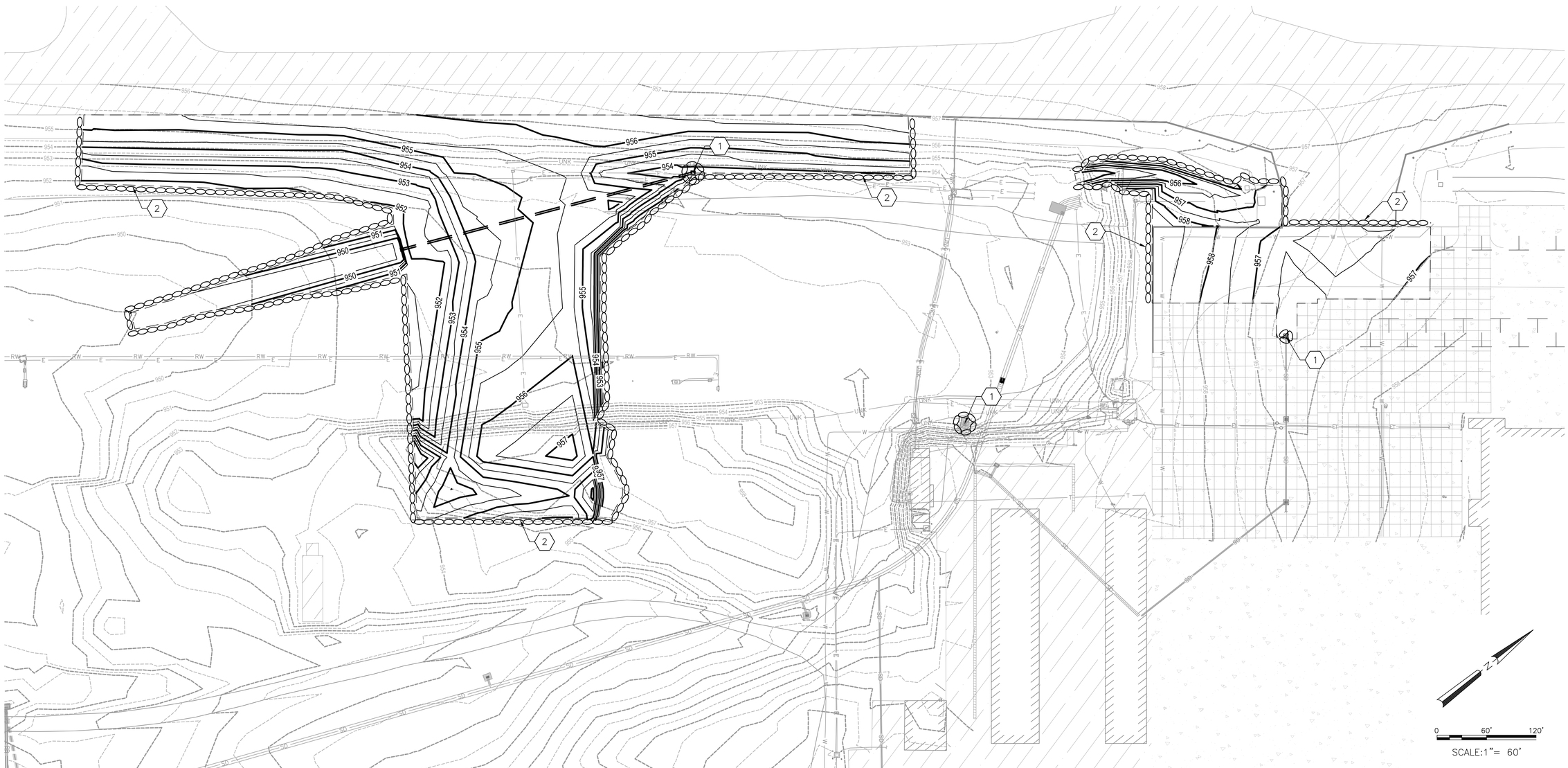

A1 EROSION CONTROL PLAN
SCALE: 1" = 60'

PER CITY OF PHOENIX CODE CHAPTER 2, SECTION 2-28. THESE PLANS ARE FOR OFFICIAL USE ONLY AND MAY NOT BE SHARED WITH OTHERS EXCEPT AS REQUIRED TO FULFILL THE OBLIGATIONS OF YOUR CONTRACT WITH THE CITY OF PHOENIX.

C&S COMPANIES

Registered Professional Engineer (Civil) CERTIFICATE NO. 33442 LANCE R. McINTOSH Date Signed 02-06-23 ARIZONA, U.S.A.

Expires: 3-31-23

NO.	REVISIONS / SUBMISSIONS	DATE

PER CITY OF PHOENIX CODE CHAPTER 2, SECTION 2-28. THESE PLANS ARE FOR OFFICIAL USE ONLY AND MAY NOT BE SHARED WITH OTHERS EXCEPT AS REQUIRED TO FULFILL THE OBLIGATIONS OF YOUR CONTRACT WITH THE CITY OF PHOENIX.

PHX DVT EYR
CITY OF PHOENIX AVIATION DEPARTMENT
PHOENIX GOODYEAR AIRPORT
NEW APRON AND TAXIWAY CONNECTOR
AV41000077 FAA/ADOT

Designed by: NM
Drawn by: RB
Checked by: LM
Date: February 2023
Dwg. scale: ---

CIP NO.(S): AV41000077 FAA/ADOT

Sheet Overview Title
EROSION CONTROL PLAN
BASE BID

Sheet Reference Number:
GC201

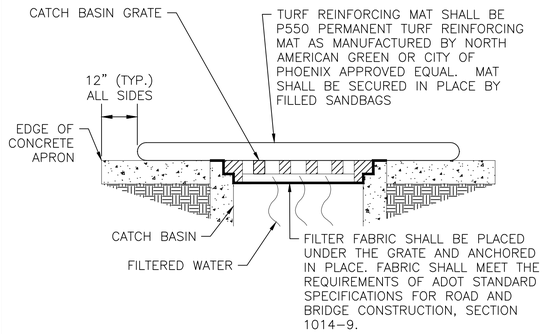

D1 STORM DRAIN INLET PROTECTION
NOT TO SCALE

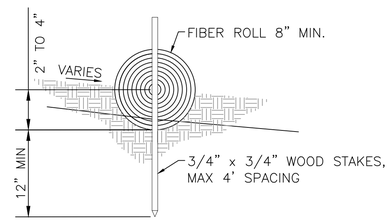

D2 TYPE 1 FIBER ROLL DETAIL
NOT TO SCALE

FIBER ROLL SILT PROTECTION
DISTURBED SOIL LIMITS
PROPOSED MAJOR/MINOR CONTOUR
EXISTING MAJOR/MINOR CONTOUR

D3 LEGEND
NOT TO SCALE

1. CATCH BASIN INLET PROTECTION, SEE DETAIL D1, THIS SHEET. (ALT 1) ITEM C-102.
2. FIBER ROLL SILT PROTECTION, SEE DETAIL D2, THIS SHEET. (ALT 1) ITEM C-102.

D4 CONSTRUCTION NOTES
NOT TO SCALE

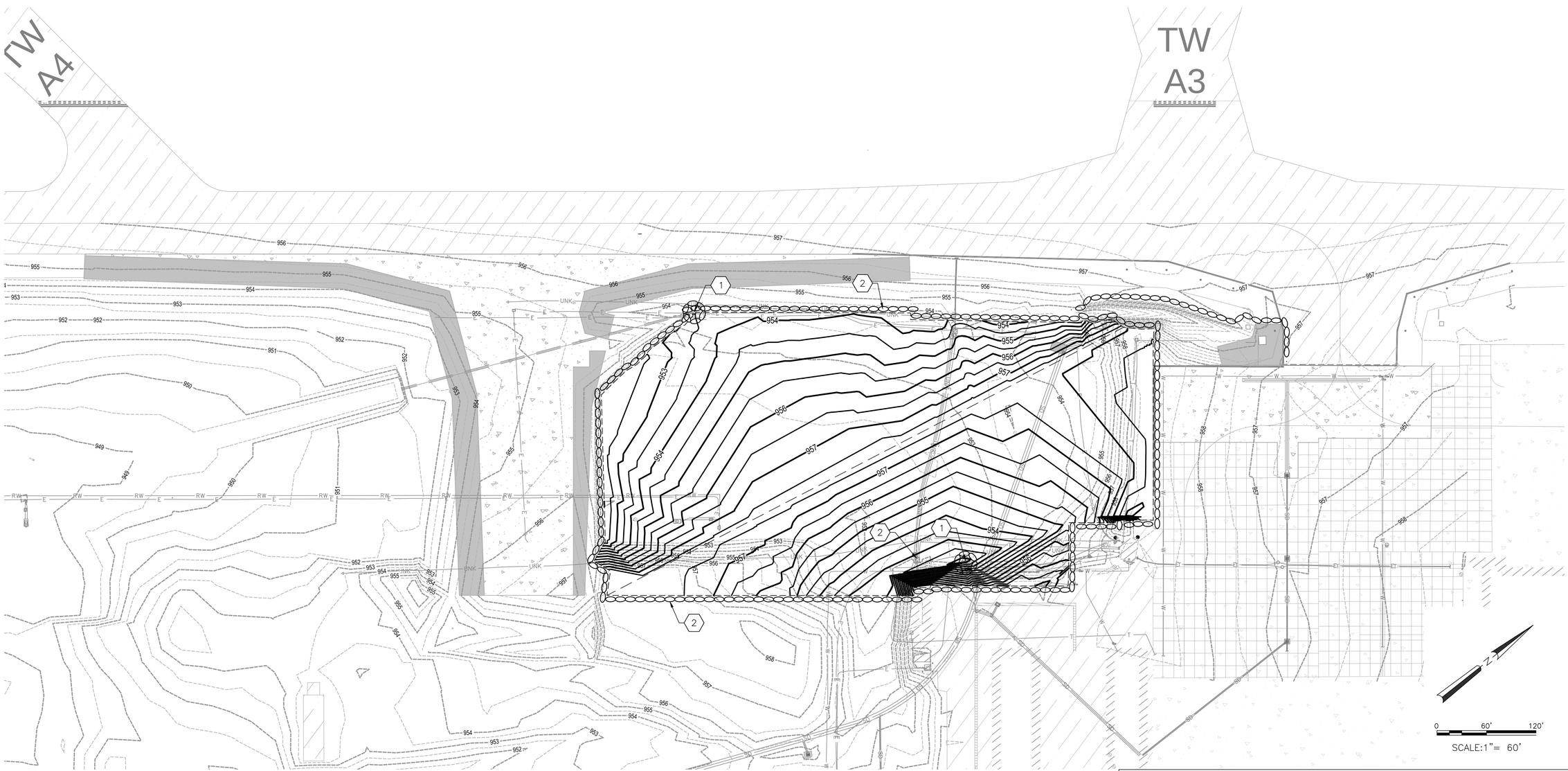

A1 GRADING AND DRAINAGE PLAN
SCALE: 1" = 60'

PER CITY OF PHOENIX CODE CHAPTER 2, SECTION 2-28. THESE PLANS ARE FOR OFFICIAL USE ONLY AND MAY NOT BE SHARED WITH OTHERS EXCEPT AS REQUIRED TO FULFILL THE OBLIGATIONS OF CONTRACTOR'S CONTRACT WITH THE CITY OF PHOENIX.

C&S COMPANIES

Registered Professional Engineer (Civil) CERTIFICATE NO. 33442 LANCE R. McINTOSH Date Signed 02-28-23 ARIZONA, U.S.A.
Expires: 3-31-23

NO.	REVISIONS / SUBMISSIONS	DATE

FOR CITY OF PHOENIX CITY CODE CHAPTER 2, SECTION 2-28 THESE PLANS ARE FOR OFFICIAL USE ONLY AND MAY NOT BE SHARED WITH OTHERS EXCEPT AS REQUIRED TO FULFILL THE OBLIGATIONS OF YOUR CONTRACT WITH THE CITY OF PHOENIX

PHX DVT CYR
CITY OF PHOENIX AVIATION DEPARTMENT
PHOENIX GOODYEAR AIRPORT
NEW APRON AND TAXIWAY CONNECTOR
AV41000077 FAA/ADOT

Designed by: RB
Drawn by: RB
Checked by: LM
Date: February 2023
Dwg scale: ---
CIP NO.(S): AV41000077 FAA/ADOT

Sheet Overview Title
EROSION CONTROL PLAN
BID ALT 1

Sheet Reference Number:
GC202

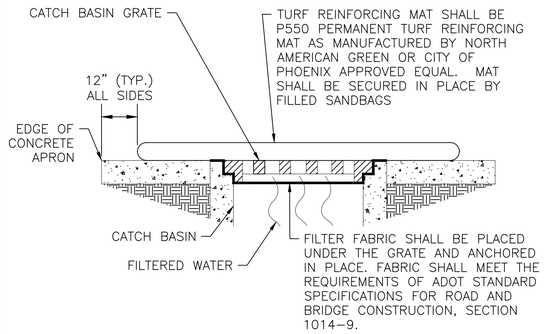

D1 STORM DRAIN INLET PROTECTION
NOT TO SCALE

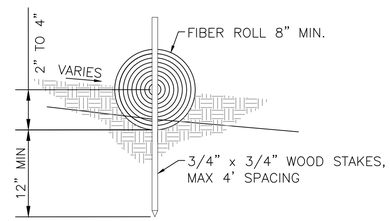

D2 TYPE 1 FIBER ROLL DETAIL
NOT TO SCALE

FIBER ROLL SILT PROTECTION
DISTURBED SOIL LIMITS
PROPOSED MAJOR/MINOR CONTOUR
EXISTING MAJOR/MINOR CONTOUR

D3 LEGEND
NOT TO SCALE

1. CATCH BASIN INLET PROTECTION, SEE DETAIL D1, THIS SHEET. (ALT 2) ITEM C-102.
2. FIBER ROLL SILT PROTECTION, SEE DETAIL D2, THIS SHEET. (ALT 2) ITEM C-102.

D4 CONSTRUCTION NOTES
NOT TO SCALE

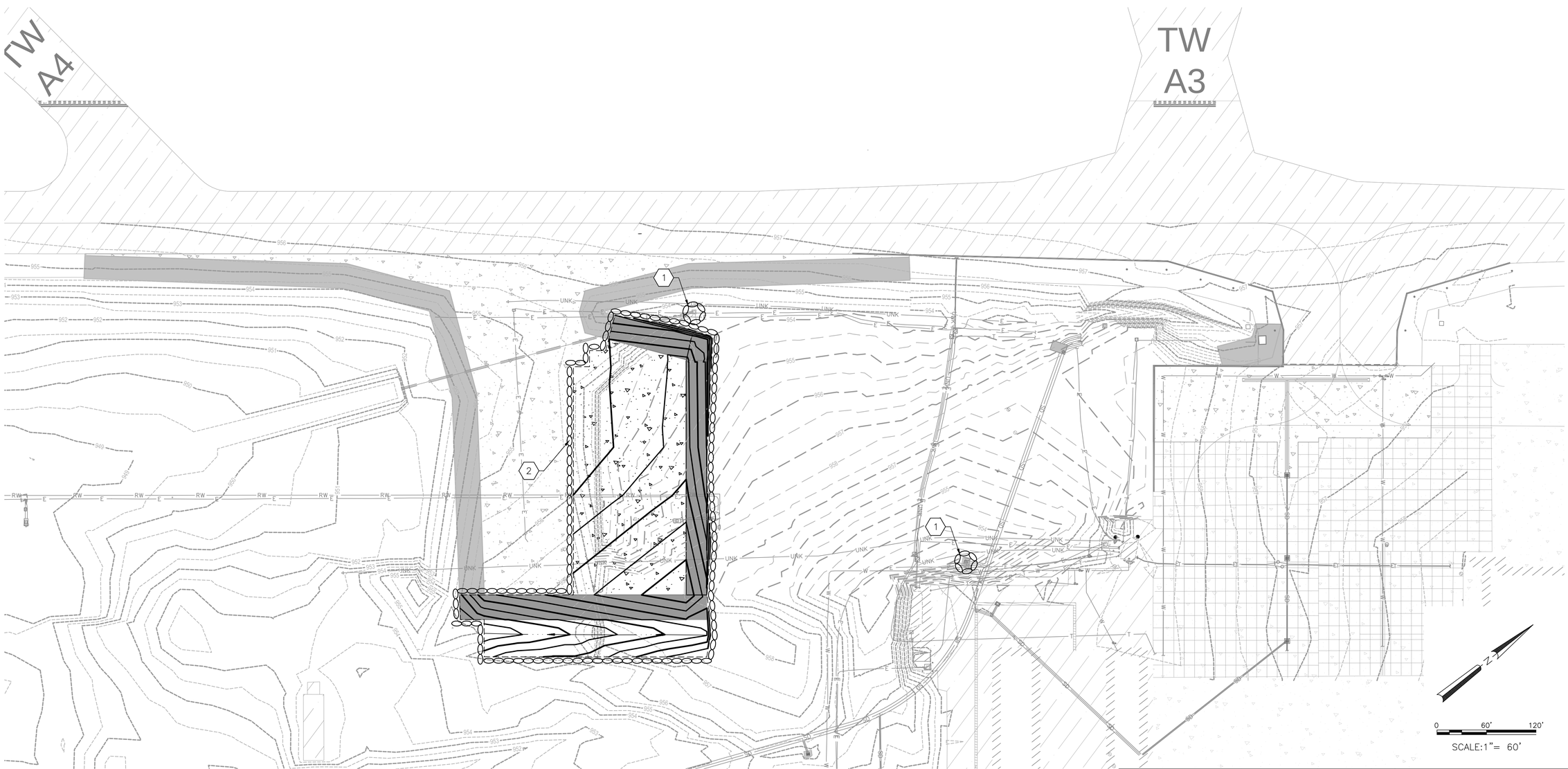

A1 GRADING AND DRAINAGE PLAN
SCALE: 1" = 60'

PER CITY OF PHOENIX CODE CHAPTER 2, SECTION 2-28. THESE PLANS ARE FOR OFFICIAL USE ONLY AND MAY NOT BE SHARED WITH OTHERS EXCEPT AS REQUIRED TO FULFILL THE OBLIGATIONS OF CONTRACTOR'S CONTRACT WITH THE CITY OF PHOENIX.

C&S COMPANIES

Registered Professional Engineer (Civil) CERTIFICATE NO. 33442 LANCE R. McINTOSH Date Signed 02-28-23 ARIZONA, U.S.A.
Expires: 3-31-23

FOR CITY OF PHOENIX CITY CODE CHAPTER 2, SECTION 2-28 THESE PLANS ARE FOR OFFICIAL USE ONLY AND MAY NOT BE SHARED WITH OTHERS EXCEPT AS REQUIRED TO FULFILL THE OBLIGATIONS OF YOUR CONTRACT WITH THE CITY OF PHOENIX

NO.	REVISIONS / SUBMISSIONS	DATE

PHX DVT CYR
CITY OF PHOENIX AVIATION DEPARTMENT
PHOENIX GOODYEAR AIRPORT
NEW APRON AND TAXIWAY CONNECTOR
AV41000077 FAA/ADOT

Designed by: RB
Drawn by: RB
Checked by: LM
Date: February 2023
Dwg. scale: ---

CIP NO.(S): AV41000077 FAA/ADOT

Sheet Overview Title
EROSION CONTROL PLAN
BID ALT 2

Sheet Reference Number:
GC203

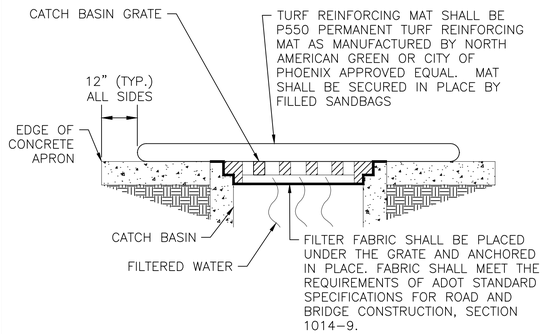

D1 STORM DRAIN INLET PROTECTION
NOT TO SCALE

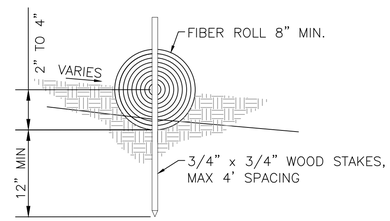

D2 TYPE 1 FIBER ROLL DETAIL
NOT TO SCALE

FIBER ROLL SILT PROTECTION
DISTURBED SOIL LIMITS
PROPOSED MAJOR/MINOR CONTOUR
EXISTING MAJOR/MINOR CONTOUR

D3 LEGEND
NOT TO SCALE

1. CATCH BASIN INLET PROTECTION, SEE DETAIL D1, THIS SHEET. (ALT 3) ITEM C-102.
2. FIBER ROLL SILT PROTECTION, SEE DETAIL D2, THIS SHEET. (ALT 3) ITEM C-102.

D4 CONSTRUCTION NOTES
NOT TO SCALE

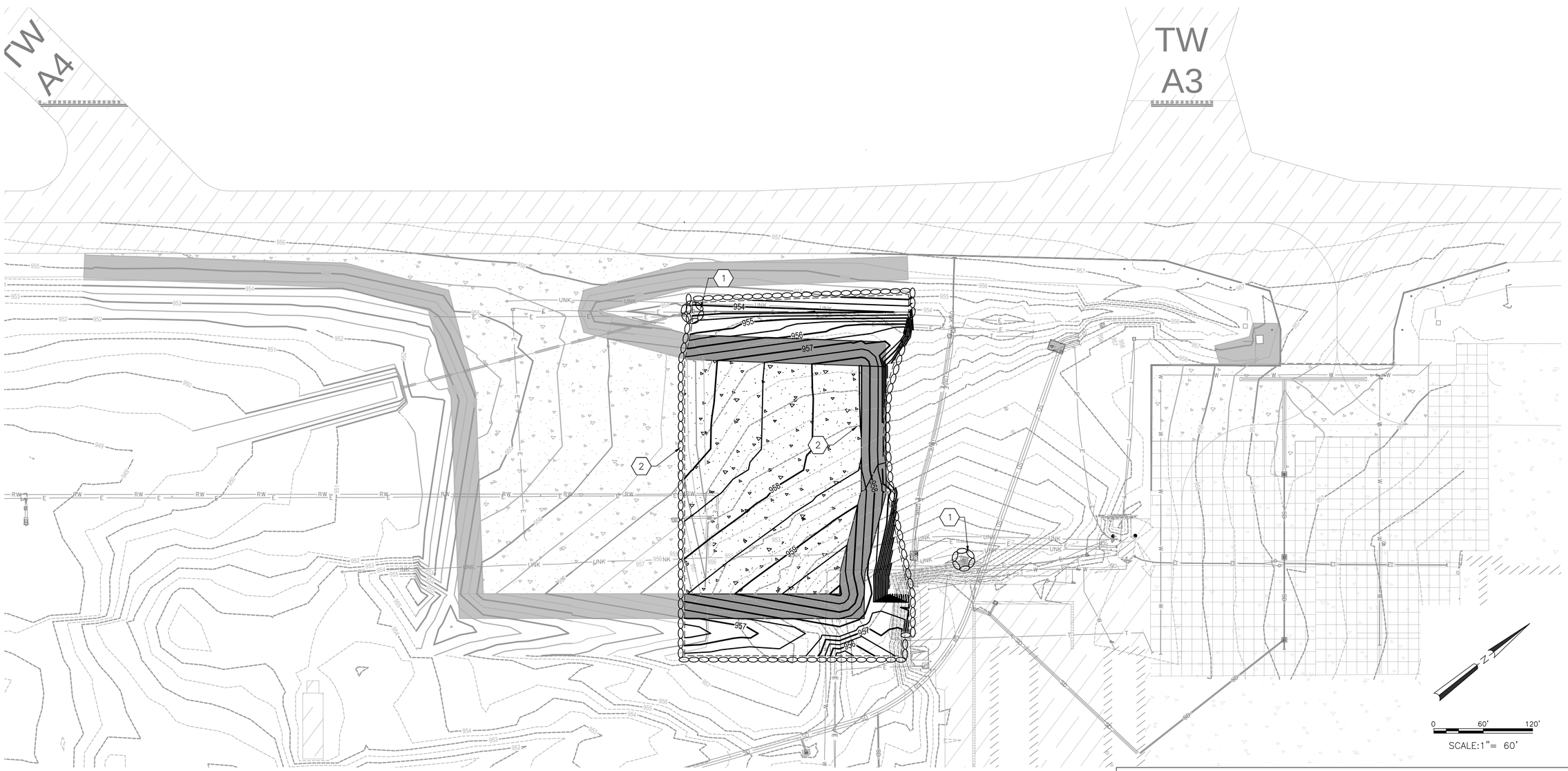

A1 GRADING AND DRAINAGE PLAN
SCALE: 1" = 60'

PER CITY OF PHOENIX CODE CHAPTER 2, SECTION 2-28. THESE PLANS ARE FOR OFFICIAL USE ONLY AND MAY NOT BE SHARED WITH OTHERS EXCEPT AS REQUIRED TO FULFILL THE OBLIGATIONS OF CONTRACTOR'S CONTRACT WITH THE CITY OF PHOENIX.

C&S COMPANIES

Registered Professional Engineer (Civil) CERTIFICATE NO. 33442 LANCE R. McINTOSH Date Signed 02-28-23 ARIZONA, U.S.A.
Expires: 3-31-23

PER CITY OF PHOENIX CODE CHAPTER 2, SECTION 2-28 THESE PLANS ARE FOR OFFICIAL USE ONLY AND MAY NOT BE SHARED WITH OTHERS EXCEPT AS REQUIRED TO FULFILL THE OBLIGATIONS OF YOUR CONTRACT WITH THE CITY OF PHOENIX.

NO.	REVISIONS / SUBMISSIONS	DATE

PHX DVT CYR
CITY OF PHOENIX AVIATION DEPARTMENT
PHOENIX GOODYEAR AIRPORT
NEW APRON AND TAXIWAY CONNECTOR
AV41000077 FAA/ADOT

Designed by: RB
Drawn by: RB
Checked by: LM
Date: February 2023
Dwg scale: ---
CIP NO.(S): AV41000077 FAA/ADOT

Sheet Overview Title
EROSION CONTROL PLAN
BID ALT 3

Sheet Reference Number:
GC204

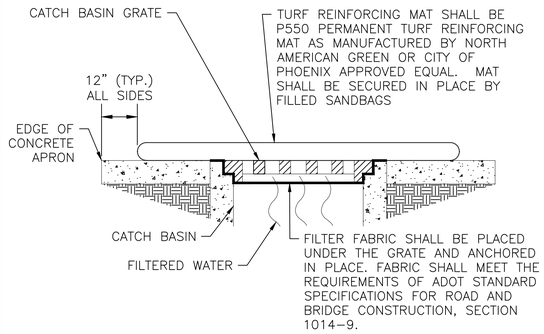

D1 STORM DRAIN INLET PROTECTION
NOT TO SCALE

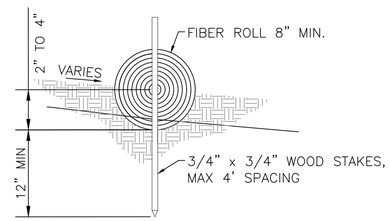

D2 TYPE 1 FIBER ROLL DETAIL
NOT TO SCALE

FIBER ROLL SILT PROTECTION
DISTURBED SOIL LIMITS
PROPOSED MAJOR/MINOR CONTOUR
EXISTING MAJOR/MINOR CONTOUR

D3 LEGEND
NOT TO SCALE

1. CATCH BASIN INLET PROTECTION, SEE DETAIL D1, THIS SHEET. (ALT 4) ITEM C-102.
2. FIBER ROLL SILT PROTECTION, SEE DETAIL D2, THIS SHEET. (ALT 4) ITEM C-102.

D4 CONSTRUCTION NOTES
NOT TO SCALE

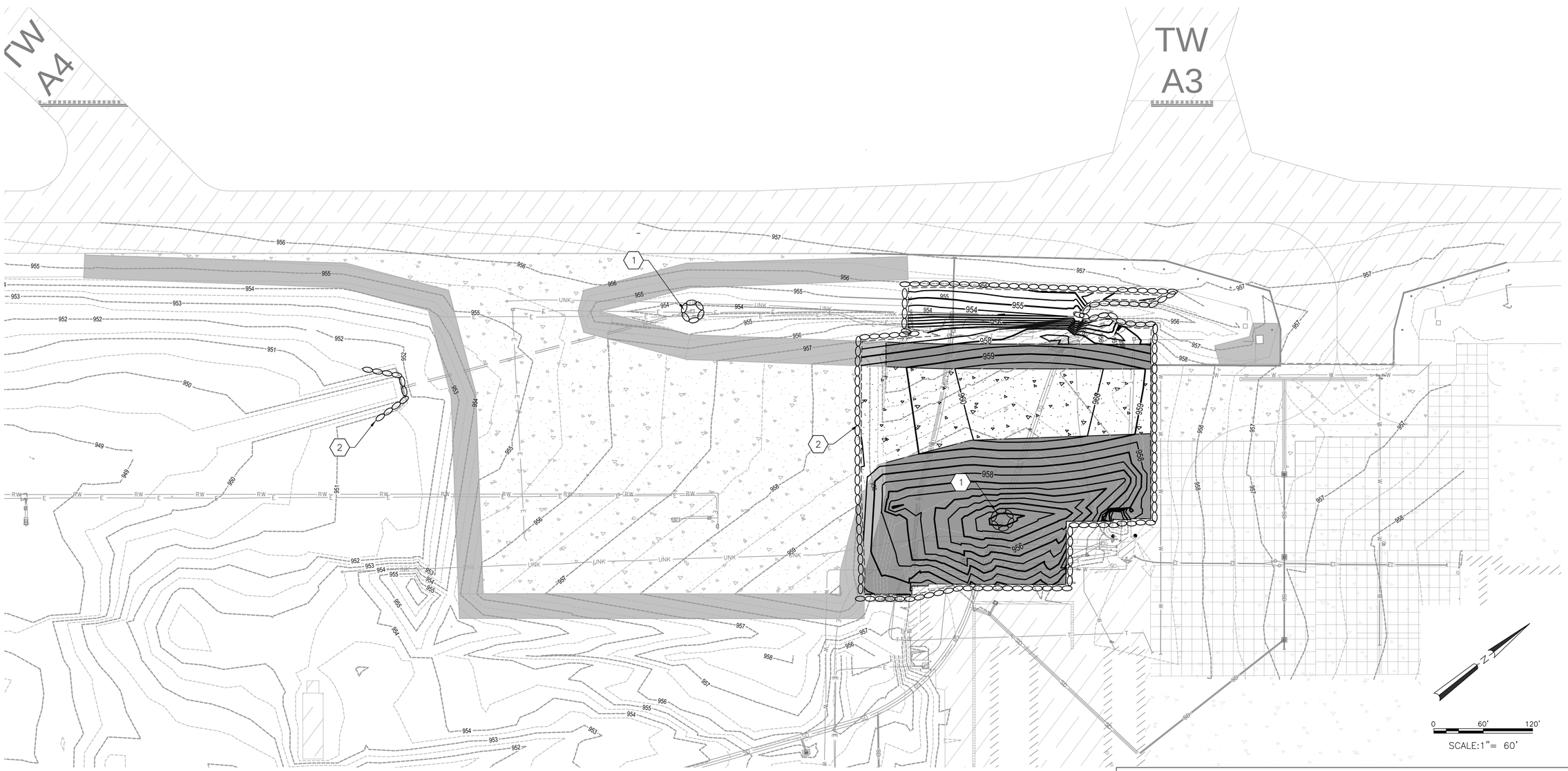

A1 GRADING AND DRAINAGE PLAN
SCALE: 1" = 60'

PER CITY OF PHOENIX CODE CHAPTER 2, SECTION 2-28. THESE PLANS ARE FOR OFFICIAL USE ONLY AND MAY NOT BE SHARED WITH OTHERS EXCEPT AS REQUIRED TO FULFILL THE OBLIGATIONS OF CONTRACTOR'S CONTRACT WITH THE CITY OF PHOENIX.

C&S COMPANIES

Registered Professional Engineer (Civil) CERTIFICATE NO. 33442 LANCE R. McINTOSH Date Signed 02-28-23 ARIZONA, U.S.A.
Expires: 3-31-23

PER CITY OF PHOENIX CITY CODE CHAPTER 2, SECTION 2-28 THESE PLANS ARE FOR OFFICIAL USE ONLY AND MAY NOT BE SHARED WITH OTHERS EXCEPT AS REQUIRED TO FULFILL THE OBLIGATIONS OF YOUR CONTRACT WITH THE CITY OF PHOENIX

NO.	REVISIONS / SUBMISSIONS	DATE

PHX DVT CYR
CITY OF PHOENIX AVIATION DEPARTMENT
PHOENIX GOODYEAR AIRPORT
NEW APRON AND TAXIWAY CONNECTOR
AV41000077 FAA/ADOT

Designed by: RB
Drawn by: RB
Checked by: LM
Date: February 2023
Dwg. scale: ---
CIP NO.(S): AV41000077 FAA/ADOT

Sheet Overview Title
EROSION CONTROL PLAN
BID ALT 4

Sheet Reference Number:
GC205

EXISTING ASPHALTIC CONCRETE PAVEMENT	
EXISTING CONCRETE PAVEMENT	
MILL AND REMOVE ASPHALTIC CONCRETE PAVEMENT	
REMOVE EXISTING CONCRETE PAVEMENT STRUCTURAL SECTION	
EXISTING PAVEMENT MARKING REMOVAL	

D3 LEGEND
NOT TO SCALE

1. FOR DEMOLITION OF ELECTRICAL ITEMS SEE AIRFIELD ELECTRICAL DEMOLITION PLAN, SHEET ED101.
2. PROTECT EXISTING STRUCTURE IN PLACE.
3. MONITORING WELL SYSTEM EQUIPMENT, PROTECT IN PLACE (LOCATION APPROXIMATE, CONTRACTOR TO FIELD VERIFY).
4. PROTECT EXISTING UTILITIES IN PLACE.
5. CONCRETE PAVEMENT REMOVAL, (BASE BID). ITEM P-101.
7. COLD MILLING, FULL DEPTH APPROXIMATELY 4", (BASE BID). ITEM P-101.
8. EXISTING PAVEMENT MARKING REMOVAL, (BASE BID). ITEM P-620.
9. ADJUST EXISTING WATER VALVE TO GRADE PER DETAILS A3 AND A4, SHEET CP502. (BASE BID). ITEM TSP-3.

D4 CONSTRUCTION NOTES
NOT TO SCALE

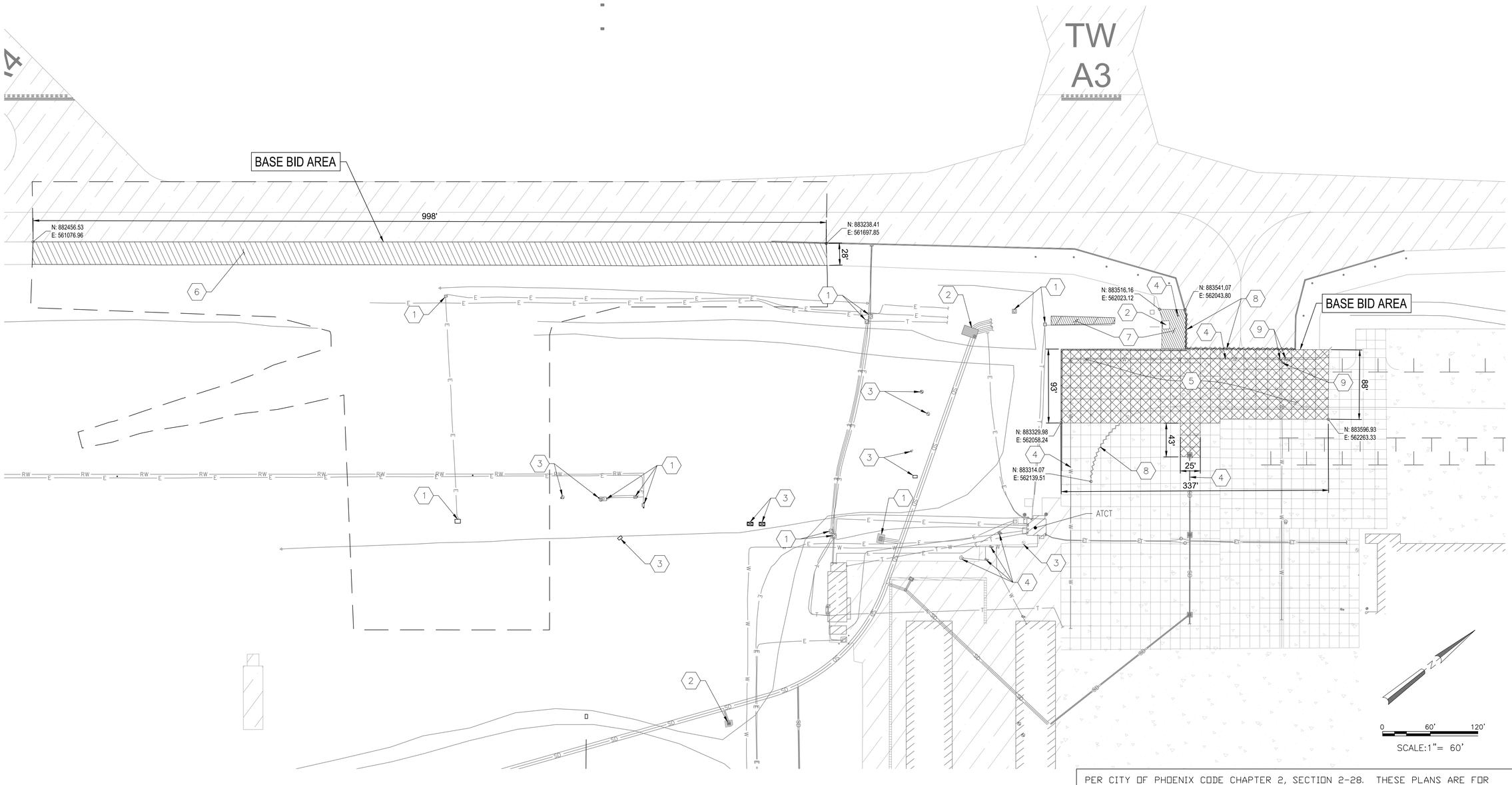

PER CITY OF PHOENIX CODE CHAPTER 2, SECTION 2-28. THESE PLANS ARE FOR OFFICIAL USE ONLY AND MAY NOT BE SHARED WITH OTHERS EXCEPT AS REQUIRED TO FULFILL THE OBLIGATIONS OF CONTRACTOR'S CONTRACT WITH THE CITY OF PHOENIX.

A1 DEMOLITION PLAN
SCALE: 1" = 60'

C&S COMPANIES

Registered Professional Engineer (Civil) CERTIFICATE NO. 33442 LANCE R. McINTOSH Date Signed 02-28-23 ARIZONA U.S.A.
Expires: 3-31-23

NO.	REVISIONS / SUBMISSIONS	DATE

FOR CITY OF PHOENIX CITY CODE CHAPTER 2, SECTION 2-28 THESE PLANS ARE FOR OFFICIAL USE ONLY AND MAY NOT BE SHARED WITH OTHERS EXCEPT AS REQUIRED TO FULFILL THE OBLIGATIONS OF YOUR CONTRACT WITH THE CITY OF PHOENIX

PHX DVT CYR
CITY OF PHOENIX AVIATION DEPARTMENT
PHOENIX GOODYEAR AIRPORT
NEW APRON AND TAXIWAY CONNECTOR
AV41000077 FAA/ADOT

Designed by: LM
Drawn by: RB
Checked by: LM
Date: February 2023
Dwg scale: —
CIP NO.(S): AV41000077 FAA/ADOT

Sheet Overview Title
DEMOLITION PLAN BASE BID

Sheet Reference Number:
CD101

EXISTING ASPHALTIC CONCRETE PAVEMENT

EXISTING CONCRETE PAVEMENT

MILL AND REMOVE ASPHALTIC CONCRETE PAVEMENT

D3 LEGEND
NOT TO SCALE

2 PROTECT EXISTING STRUCTURE IN PLACE.

3 MONITORING WELL SYSTEM EQUIPMENT, PROTECT IN PLACE. (LOCATION APPROXIMATE, CONTRACTOR TO FIELD VERIFY).

4 PROTECT EXISTING UTILITIES IN PLACE.

6 COLD MILLING, FULL DEPTH APPROXIMATELY 4", (BID ALT 2). ITEM P-101.

10 MONITORING WELL SYSTEM EQUIPMENT, INSTALL VAULT RISER DETAIL PER DETAIL A2, SHEET CP501. (LOCATION APPROXIMATE, CONTRACTOR TO FIELD VERIFY).

D4 CONSTRUCTION NOTES
NOT TO SCALE

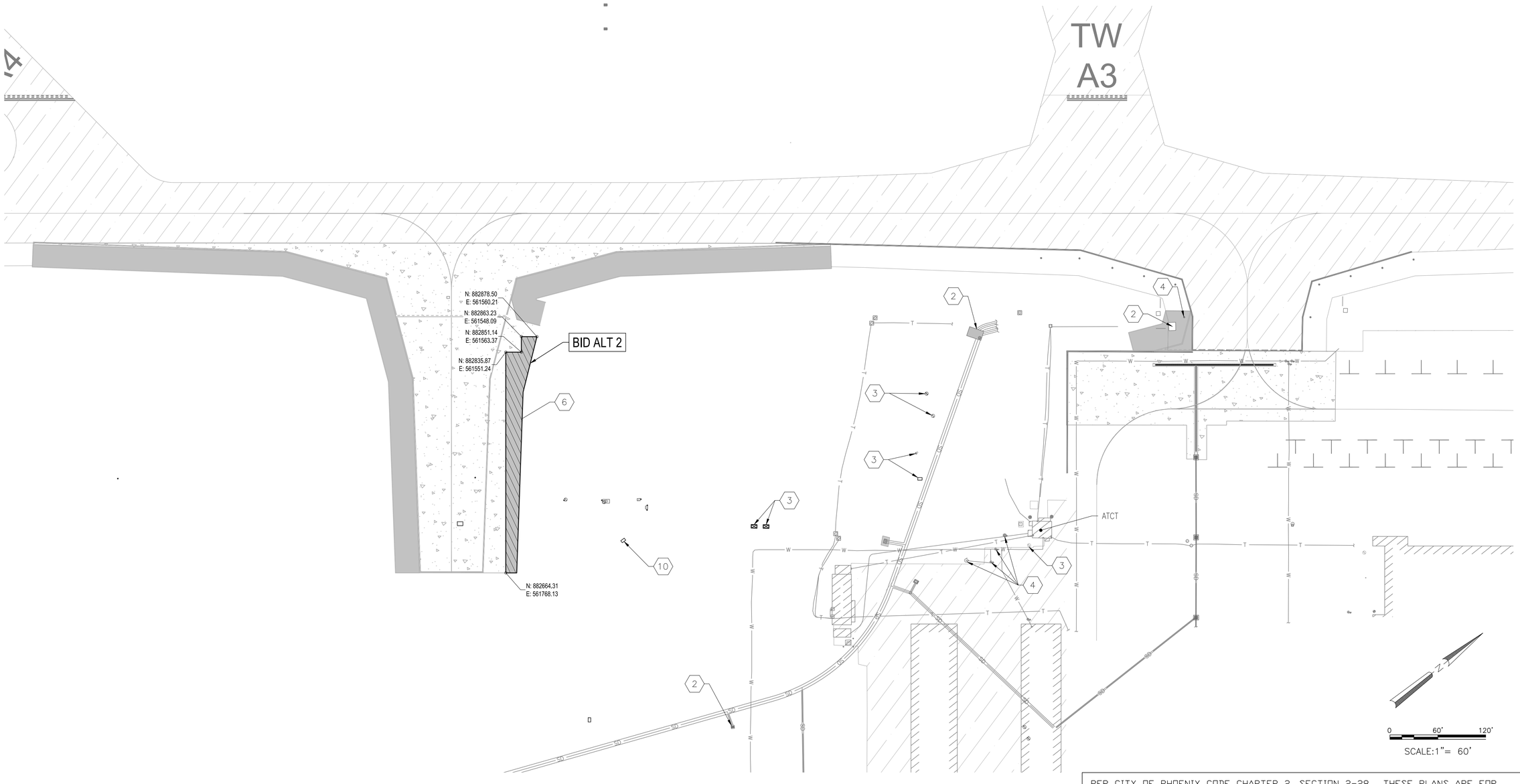

A1 DEMOLITION PLAN
SCALE: 1" = 60'

PER CITY OF PHOENIX CODE CHAPTER 2, SECTION 2-28. THESE PLANS ARE FOR OFFICIAL USE ONLY AND MAY NOT BE SHARED WITH OTHERS EXCEPT AS REQUIRED TO FULFILL THE OBLIGATIONS OF CONTRACTOR'S CONTRACT WITH THE CITY OF PHOENIX.

C&S COMPANIES

Registered Professional Engineer (Civil) CERTIFICATE NO. 33442 LANCE R. McINTOSH Date Signed 02-28-23 ARIZONA U.S.A.
Expires: 3-31-23

NO.	REVISIONS / SUBMISSIONS	DATE

FOR CITY OF PHOENIX CITY CODE CHAPTER 2, SECTION 2-28 THESE PLANS ARE FOR OFFICIAL USE ONLY AND MAY NOT BE SHARED WITH OTHERS EXCEPT AS REQUIRED TO FULFILL THE OBLIGATIONS OF YOUR CONTRACT WITH THE CITY OF PHOENIX

PHX DVT CYR
CITY OF PHOENIX AVIATION DEPARTMENT
PHOENIX GOODYEAR AIRPORT
NEW APRON AND TAXIWAY CONNECTOR
AV41000077 FAA/ADOT

Designed by: LM
Drawn by: RB
Checked by: LM
Date: February 2023
Dwg scale: —
CIP NO.(S): AV41000077 FAA/ADOT

Sheet Overview Title
DEMOLITION PLAN
BID ALT 2

Sheet Reference Number:
CD-102

EXISTING ASPHALTIC CONCRETE PAVEMENT	
EXISTING CONCRETE PAVEMENT	
MILL AND REMOVE ASPHALTIC CONCRETE PAVEMENT	
EXISTING PAVEMENT MARKING REMOVAL	

D3 LEGEND
NOT TO SCALE

2	PROTECT EXISTING STRUCTURE IN PLACE.
3	MONITORING WELL SYSTEM EQUIPMENT, PROTECT IN PLACE (LOCATION APPROXIMATE, CONTRACTOR TO FIELD VERIFY).
4	PROTECT EXISTING UTILITIES IN PLACE.
6	COLD MILLING, FULL DEPTH APPROXIMATELY 4", (BID ALT 3). ITEM P-101.
8	EXISTING PAVEMENT MARKING REMOVAL, (BID ALT 3). ITEM P-620.
10	MONITORING WELL SYSTEM EQUIPMENT, INSTALL VAULT RISER PER DETAIL A2, SHEET CP501. (LOCATION APPROXIMATE, CONTRACTOR TO FIELD VERIFY).

D4 CONSTRUCTION NOTES
NOT TO SCALE

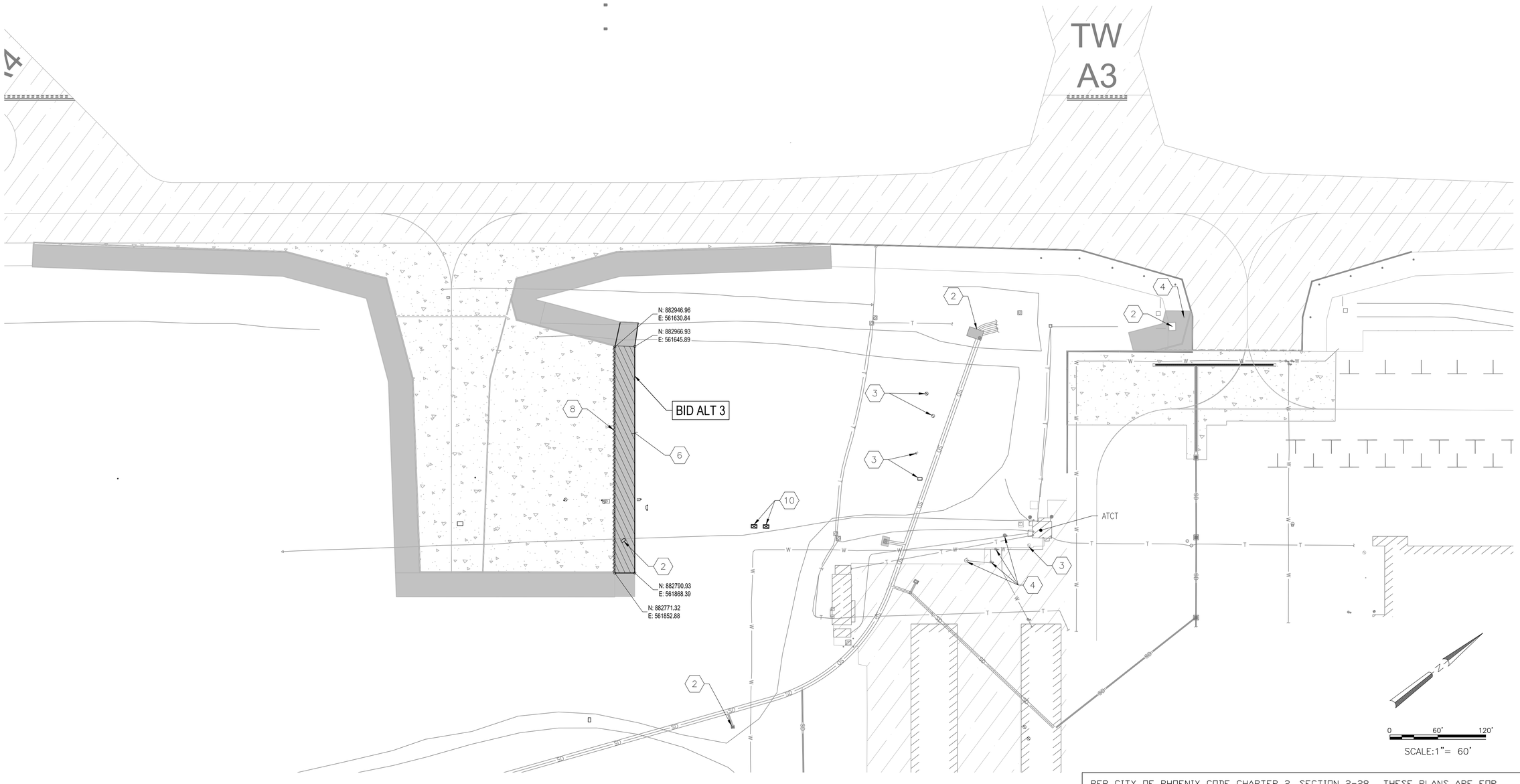

A1 DEMOLITION PLAN
SCALE: 1" = 60'

PER CITY OF PHOENIX CODE CHAPTER 2, SECTION 2-28. THESE PLANS ARE FOR OFFICIAL USE ONLY AND MAY NOT BE SHARED WITH OTHERS EXCEPT AS REQUIRED TO FULFILL THE OBLIGATIONS OF CONTRACTOR'S CONTRACT WITH THE CITY OF PHOENIX.

C&S COMPANIES

Registered Professional Engineer (Civil) CERTIFICATE NO. 33442 LANCE R. McINTOSH Date Signed 02-28-23 ARIZONA U.S.A.
Expires: 3-31-23

NO.	REVISIONS / SUBMISSIONS	DATE

FOR CITY OF PHOENIX CITY CODE CHAPTER 2, SECTION 2-28 THESE PLANS ARE FOR OFFICIAL USE ONLY AND MAY NOT BE SHARED WITH OTHERS EXCEPT AS REQUIRED TO FULFILL THE OBLIGATIONS OF YOUR CONTRACT WITH THE CITY OF PHOENIX

PHX DVT CYR
CITY OF PHOENIX AVIATION DEPARTMENT
PHOENIX GOODYEAR AIRPORT
NEW APRON AND TAXIWAY CONNECTOR
AV41000077 FAA/ADOT

Designed by: LM
Drawn by: RB
Checked by: LM
Date: February 2023
Dwg scale: —
CIP NO.(S): AV41000077 FAA/ADOT

Sheet Overview Title
DEMOLITION PLAN
BID ALT 3

Sheet Reference Number:
CD-103

EXISTING ASPHALTIC CONCRETE PAVEMENT

EXISTING CONCRETE PAVEMENT

MILL AND REMOVE ASPHALTIC CONCRETE PAVEMENT

EXISTING PAVEMENT MARKING REMOVAL

D3 LEGEND
NOT TO SCALE

2. PROTECT EXISTING STRUCTURE IN PLACE.
3. MONITORING WELL SYSTEM EQUIPMENT, PROTECT IN PLACE (LOCATION APPROXIMATE, CONTRACTOR TO FIELD VERIFY).
4. PROTECT EXISTING UTILITIES IN PLACE.
6. COLD MILLING, FULL DEPTH APPROXIMATELY 4", (BID ALT 4). ITEM P-101.
8. EXISTING PAVEMENT MARKING REMOVAL, (BID ALT 4). ITEM P-620.
10. MONITORING WELL SYSTEM EQUIPMENT, INSTALL VAULT RISER PER DETAIL A2, SHEET CP501. (LOCATION APPROXIMATE, CONTRACTOR TO FIELD VERIFY).

D4 CONSTRUCTION NOTES
NOT TO SCALE

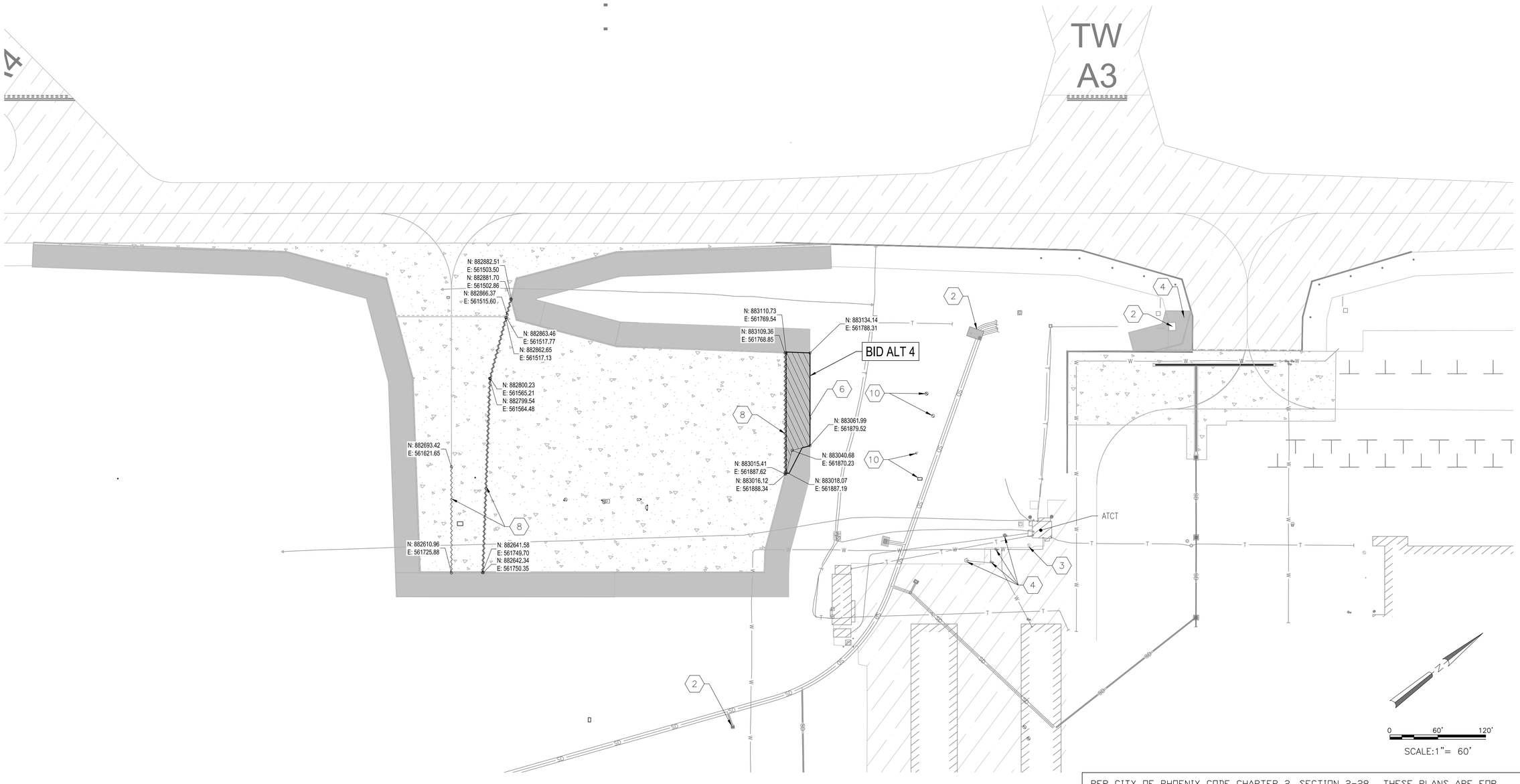

PER CITY OF PHOENIX CODE CHAPTER 2, SECTION 2-28. THESE PLANS ARE FOR OFFICIAL USE ONLY AND MAY NOT BE SHARED WITH OTHERS EXCEPT AS REQUIRED TO FULFILL THE OBLIGATIONS OF CONTRACTOR'S CONTRACT WITH THE CITY OF PHOENIX.

A1 DEMOLITION PLAN
SCALE: 1" = 60'

C&S COMPANIES

Registered Professional Engineer (Civil) CERTIFICATE NO. 33442 LANCE R. McINTOSH Date Signed 02-28-23 ARIZONA U.S.A.
Expires: 3-31-23

FOR CITY OF PHOENIX CITY CODE CHAPTER 2, SECTION 2-28 THESE PLANS ARE FOR OFFICIAL USE ONLY AND MAY NOT BE SHARED WITH OTHERS EXCEPT AS REQUIRED TO FULFILL THE OBLIGATIONS OF YOUR CONTRACT WITH THE CITY OF PHOENIX

NO.	REVISIONS / SUBMISSIONS	DATE

PHX DVT CYR
CITY OF PHOENIX AVIATION DEPARTMENT
PHOENIX GOODYEAR AIRPORT
NEW APRON AND TAXIWAY CONNECTOR
AV41000077 FAA/ADOT

Designed by: LM
Drawn by: RB
Checked by: LM
Date: February 2023
Dwg scale: ___
CIP NO.(S): AV41000077 FAA/ADOT

Sheet Overview Title
DEMOLITION PLAN
BID ALT 4

Sheet Reference Number:
CD-104

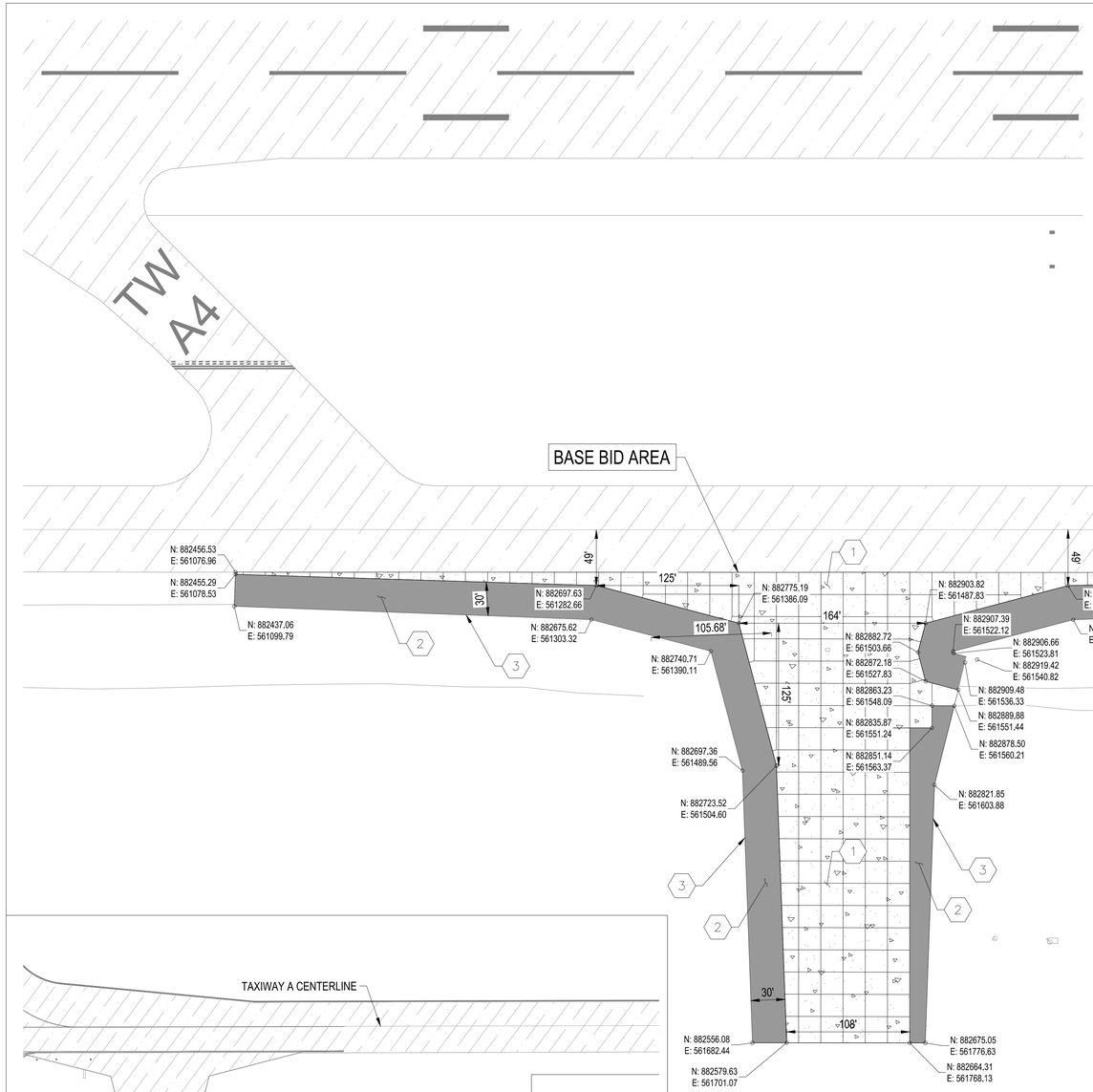

EXISTING ASPHALTIC CONCRETE PAVEMENT

PROPOSED FULL STRENGTH AC PAVEMENT STRUCTURAL SECTION

PROPOSED AC SHOULDER PAVEMENT STRUCTURAL SECTION

PROPOSED PCCP PAVEMENT STRUCTURAL SECTION

PROPOSED 12" TRENCH DRAIN

SWS/ASOS LOCATION BOUNDARY

D3 LEGEND
NOT TO SCALE

1. CONSTRUCT NEW CONCRETE PAVEMENT STRUCTURAL SECTION PER TYPICAL PCCP SECTION DETAIL D3, SHEET CP501 (BASE BID).
2. CONSTRUCT NEW ASPHALTIC CONCRETE SHOULDER PAVEMENT STRUCTURAL SECTION PER DETAIL C3, SHEET CP501 (BASE BID).
3. CONSTRUCT MARICOPA PAVEMENT EDGE AND SHOULDER GRADE DETAIL C4, SHEET CP501 (BASE BID).
4. CONSTRUCT NEW ASPHALTIC CONCRETE PAVEMENT PER DETAIL D4, SHEET CP501 (BASE BID).
5. PROPOSED 12" AIRCRAFT RATED TRENCH DRAIN, SEE GRADING AND DRAINAGE PLAN (BASE BID).
6. CONSTRUCT NEW CONCRETE PAVEMENT STRUCTURAL SECTION PER TYPICAL PCCP SECTION DETAIL D3, SHEET CP501 (BASE BID).
7. CONSTRUCT NEW ASPHALTIC CONCRETE SHOULDER PAVEMENT STRUCTURAL SECTION PER DETAIL C3, SHEET CP501 (BASE BID).

D4 CONSTRUCTION NOTES
NOT TO SCALE

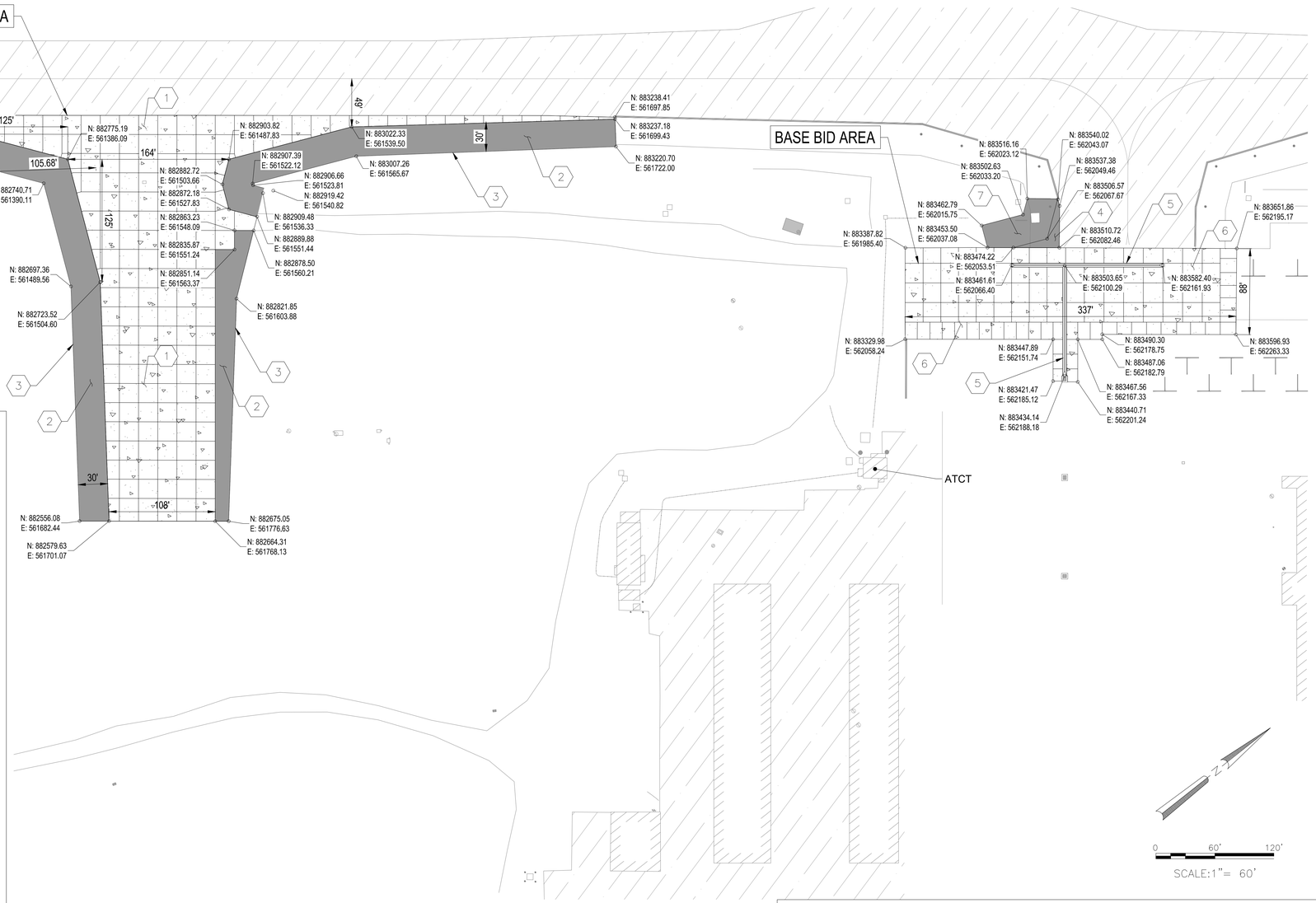

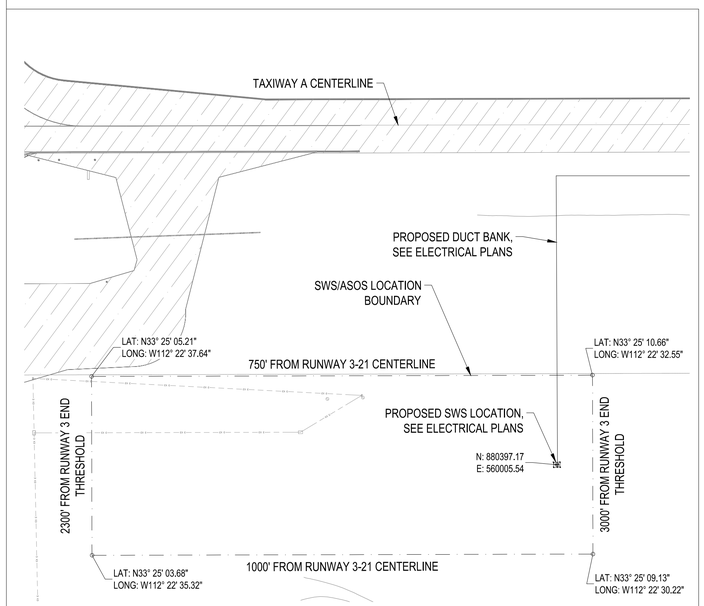

A1 SWS RELOCATION DETAIL
SCALE: 1" = 100'

A2 GEOMETRY PLAN
SCALE: 1" = 60'

0 60' 120'
SCALE:1"= 60'

PER CITY OF PHOENIX CODE CHAPTER 2, SECTION 2-28. THESE PLANS ARE FOR OFFICIAL USE ONLY AND MAY NOT BE SHARED WITH OTHERS EXCEPT AS REQUIRED TO FULFILL THE OBLIGATIONS OF CONTRACTOR'S CONTRACT WITH THE CITY OF PHOENIX.

C&S COMPANIES

Registered Professional Engineer (Civil) CERTIFICATE NO. 33442 LANCE R. McINTOSH Date Signed 02-28-23 ARIZONA U.S.A.
Expires: 3-31-23

NO.	REVISIONS / SUBMISSIONS	DATE

FOR CITY OF PHOENIX CITY CODE CHAPTER 2, SECTION 2-28 THESE PLANS ARE FOR OFFICIAL USE ONLY AND MAY NOT BE SHARED WITH OTHERS EXCEPT AS REQUIRED TO FULFILL THE OBLIGATIONS OF YOUR CONTRACT WITH THE CITY OF PHOENIX.

PHX DVT CYR
CITY OF PHOENIX AVIATION DEPARTMENT
PHOENIX GOODYEAR AIRPORT
NEW APRON AND TAXIWAY CONNECTOR
AV41000077 FAA/ADOT

Designed by: NM
Drawn by: RB
Checked by: LM
Date: February 2023
Dwg scale: ---
CIP NO.(S): AV41000077 FAA/ADOT

Sheet Overview Title
GEOMETRY PLAN
BASE BID

Sheet Reference Number:
CG101

EXISTING ASPHALTIC CONCRETE PAVEMENT

PROPOSED FULL STRENGTH AC PAVEMENT STRUCTURAL SECTION

EXISTING AC SHOULDER PAVEMENT STRUCTURAL SECTION

PROPOSED PCCP PAVEMENT STRUCTURAL SECTION

D3 LEGEND
NOT TO SCALE

1. CONSTRUCT NEW CONCRETE PAVEMENT STRUCTURAL SECTION PER TYPICAL PCCP SECTION DETAIL D3, SHEET CP501 (BID ALT 2).
2. CONSTRUCT NEW ASPHALTIC CONCRETE SHOULDER PAVEMENT STRUCTURAL SECTION PER DETAIL C3, SHEET CP501 (BID ALT 2).
3. CONSTRUCT MARICOPA PAVEMENT EDGE AND SHOULDER GRADE DETAIL C4, SHEET CP501 (BID ALT 2).

D4 CONSTRUCTION NOTES
NOT TO SCALE

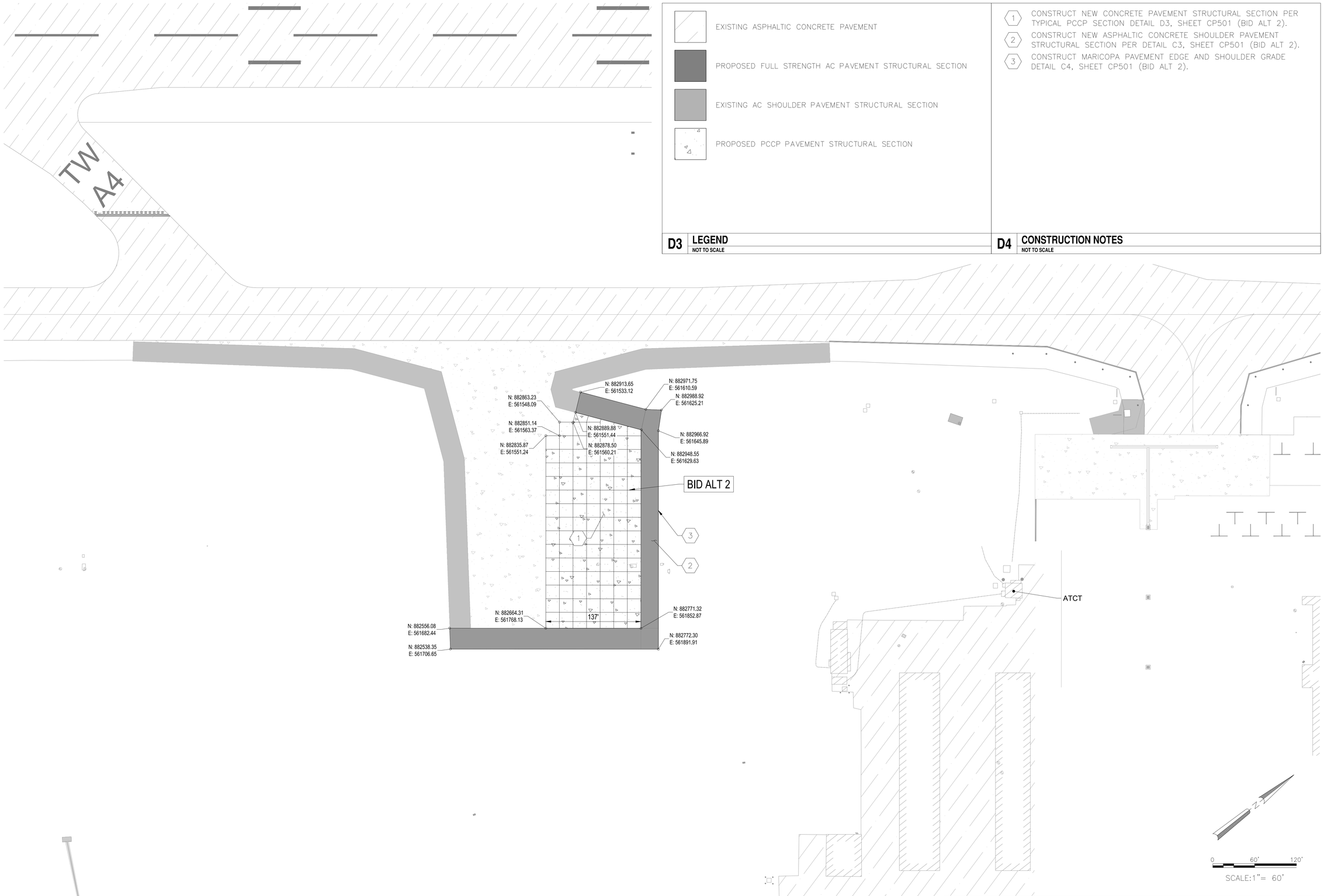

A1 GEOMETRY PLAN
SCALE: 1" = 60'

PER CITY OF PHOENIX CODE CHAPTER 2, SECTION 2-28. THESE PLANS ARE FOR OFFICIAL USE ONLY AND MAY NOT BE SHARED WITH OTHERS EXCEPT AS REQUIRED TO FULFILL THE OBLIGATIONS OF CONTRACTOR'S CONTRACT WITH THE CITY OF PHOENIX.

C&S COMPANIES

Registered Professional Engineer (Civil)
CERTIFICATE NO. 33442
LANCE R. McINTOSH
Date Signed 02-06-23
Arizona U.S.A.
Expires: 3-31-23

PER CITY OF PHOENIX CITY CODE CHAPTER 2, SECTION 2-28 THESE PLANS ARE FOR OFFICIAL USE ONLY AND MAY NOT BE SHARED WITH OTHERS EXCEPT AS REQUIRED TO FULFILL THE OBLIGATIONS OF YOUR CONTRACT WITH THE CITY OF PHOENIX.

NO.	REVISIONS / SUBMISSIONS	DATE

PHX DVT CYA
CITY OF PHOENIX AVIATION DEPARTMENT
PHOENIX GOODYEAR AIRPORT
NEW APRON AND TAXIWAY CONNECTOR
AV41000077 FAA/ADOT

Designed by: NM
Drawn by: RB
Checked by: LM
Date: February 2023
Dwg scale: ---
CIP NO.(S): AV41000077 FAA/ADOT

Sheet Overview Title
GEOMETRY PLAN BID ALT 2

Sheet Reference Number:
CG-102

EXISTING ASPHALTIC CONCRETE PAVEMENT

PROPOSED FULL STRENGTH AC PAVEMENT STRUCTURAL SECTION

EXISTING AC SHOULDER PAVEMENT STRUCTURAL SECTION

PROPOSED PCCP PAVEMENT STRUCTURAL SECTION

D3 LEGEND
NOT TO SCALE

1. CONSTRUCT NEW CONCRETE PAVEMENT STRUCTURAL SECTION PER TYPICAL PCCP SECTION DETAIL D3, SHEET CP501 (BID ALT 3).
2. CONSTRUCT NEW ASPHALTIC CONCRETE SHOULDER PAVEMENT STRUCTURAL SECTION PER DETAIL C3, SHEET CP501 (BID ALT 3).
3. CONSTRUCT MARICOPA PAVEMENT EDGE AND SHOULDER GRADE DETAIL C4, SHEET CP501 (BID ALT 3).

D4 CONSTRUCTION NOTES
NOT TO SCALE

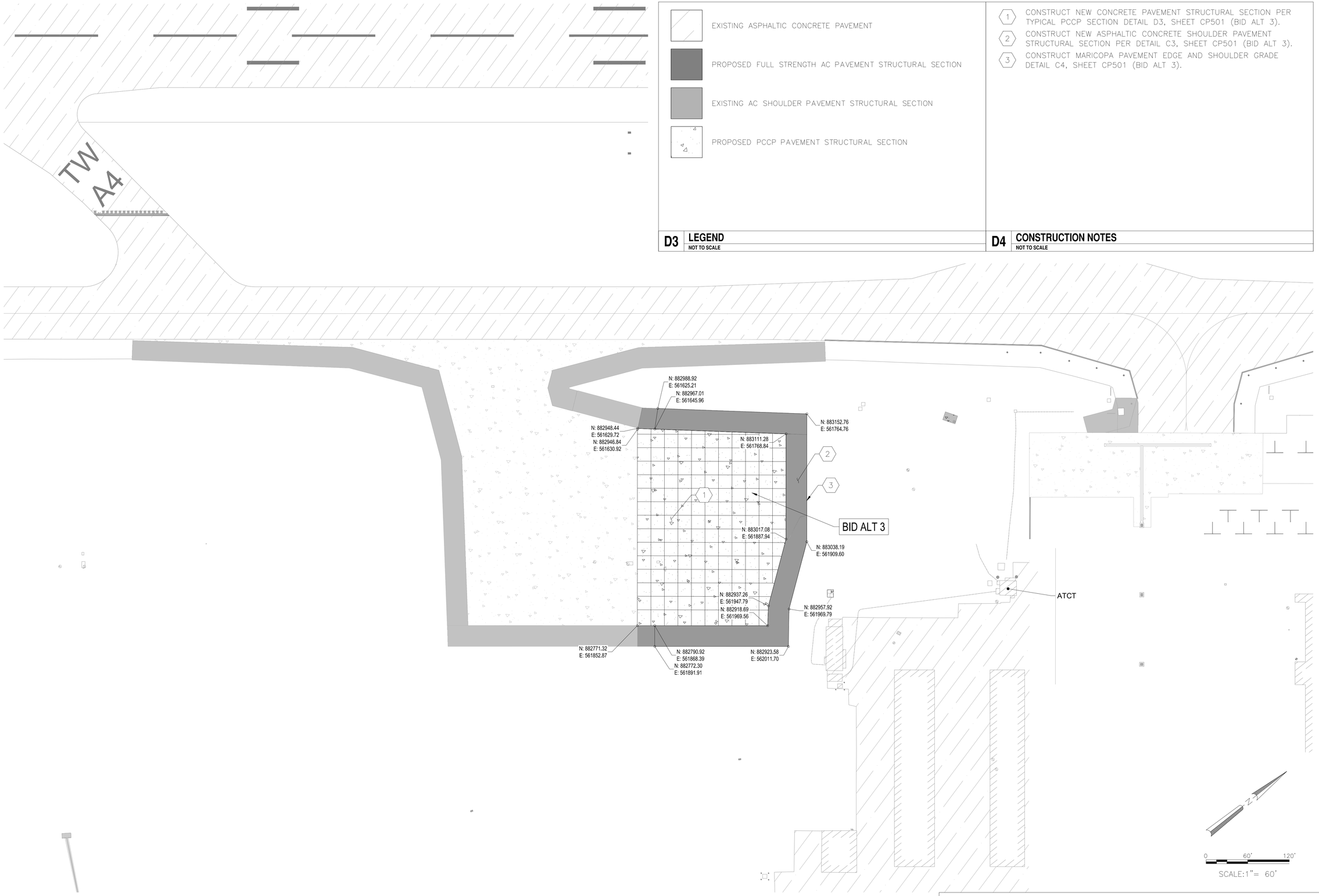

A1 GEOMETRY PLAN
SCALE: 1" = 60'

PER CITY OF PHOENIX CODE CHAPTER 2, SECTION 2-28. THESE PLANS ARE FOR OFFICIAL USE ONLY AND MAY NOT BE SHARED WITH OTHERS EXCEPT AS REQUIRED TO FULFILL THE OBLIGATIONS OF CONTRACTOR'S CONTRACT WITH THE CITY OF PHOENIX.

C&S COMPANIES

Registered Professional Engineer (Civil) CERTIFICATE NO. 33442 LANCE R. McINTOSH Date Signed 02-06-23 Arizona U.S.A.
Expires: 3-31-23

PER CITY OF PHOENIX CITY CODE CHAPTER 2, SECTION 2-28 THESE PLANS ARE FOR OFFICIAL USE ONLY AND MAY NOT BE SHARED WITH OTHERS EXCEPT AS REQUIRED TO FULFILL THE OBLIGATIONS OF YOUR CONTRACT WITH THE CITY OF PHOENIX.

NO.	REVISIONS / SUBMISSIONS	DATE

PHX DVT CYR
CITY OF PHOENIX AVIATION DEPARTMENT
PHOENIX GOODYEAR AIRPORT
NEW APRON AND TAXIWAY CONNECTOR
AV41000077 FAA/ADOT

Designed by: NM
Drawn by: RB
Checked by: LM
Date: February 2023
Dwg scale: ---
CIP NO.(S): AV41000077 FAA/ADOT

Sheet Overview Title
GEOMETRY PLAN
BID ALT 3

Sheet Reference Number:
CG103

EXISTING ASPHALTIC CONCRETE PAVEMENT

PROPOSED FULL STRENGTH AC PAVEMENT STRUCTURAL SECTION

EXISTING AC SHOULDER PAVEMENT STRUCTURAL SECTION

PROPOSED PCCP PAVEMENT STRUCTURAL SECTION

D3 LEGEND
NOT TO SCALE

1. CONSTRUCT NEW CONCRETE PAVEMENT STRUCTURAL SECTION PER TYPICAL PCCP SECTION DETAIL D3, SHEET CP501 (BID ALT 4).
2. CONSTRUCT NEW ASPHALTIC CONCRETE SHOULDER PAVEMENT STRUCTURAL SECTION PER DETAIL C3, SHEET CP501 (BID ALT 4).
3. CONSTRUCT MARICOPA PAVEMENT EDGE AND SHOULDER GRADE DETAIL C4, SHEET CP501 (BID ALT 4).

D4 CONSTRUCTION NOTES
NOT TO SCALE

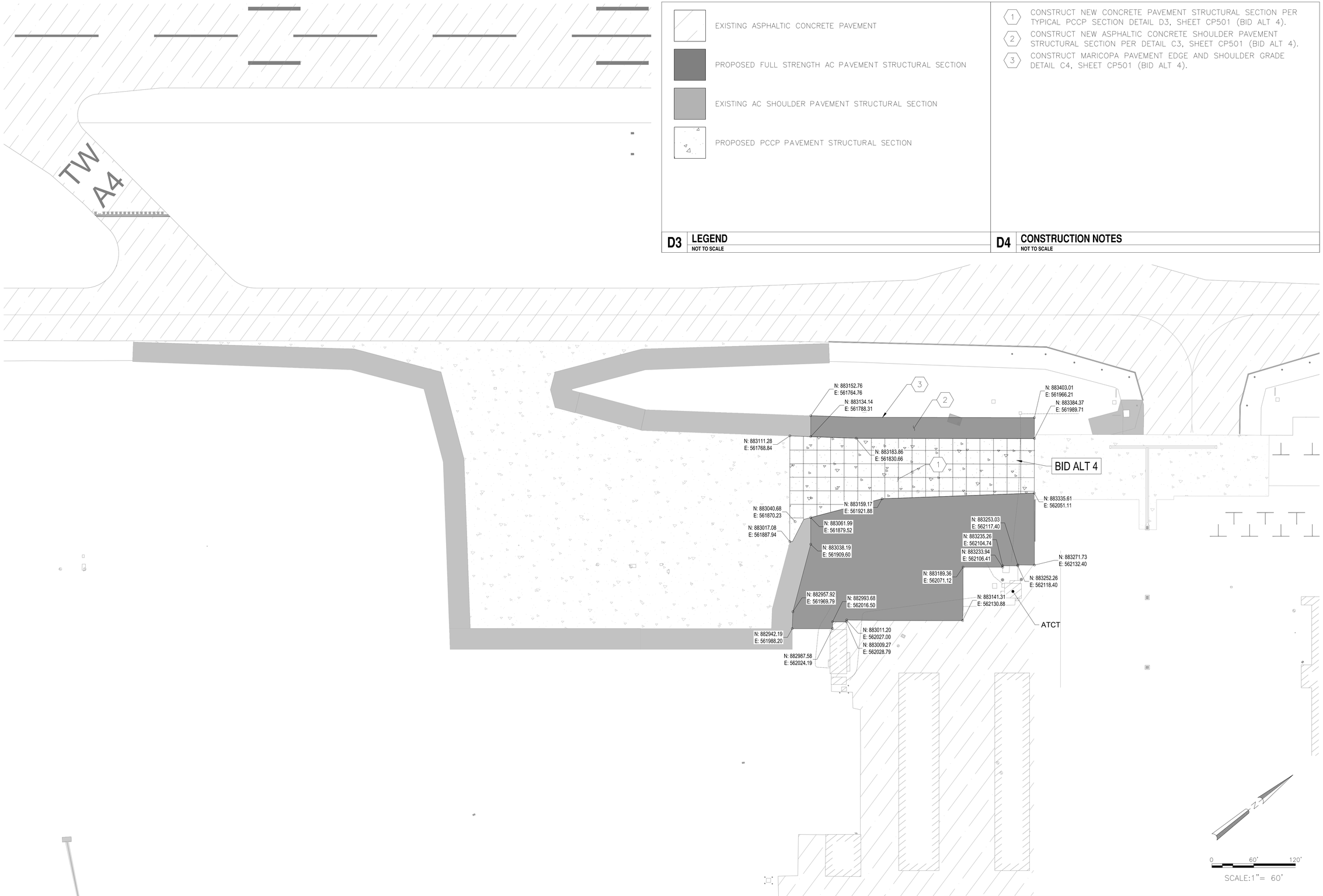

A1 GEOMETRY PLAN
SCALE: 1" = 60'

PER CITY OF PHOENIX CODE CHAPTER 2, SECTION 2-28. THESE PLANS ARE FOR OFFICIAL USE ONLY AND MAY NOT BE SHARED WITH OTHERS EXCEPT AS REQUIRED TO FULFILL THE OBLIGATIONS OF CONTRACTOR'S CONTRACT WITH THE CITY OF PHOENIX.

C&S COMPANIES

Registered Professional Engineer (Civil) CERTIFICATE NO. 33442 LANCE R. McINTOSH Date Signed 02-06-23 ARIZONA U.S.A.
Expires: 3-31-23

NO.	REVISIONS / SUBMISSIONS	DATE

FOR CITY OF PHOENIX CITY CODE CHAPTER 2, SECTION 2-28 THESE PLANS ARE FOR OFFICIAL USE ONLY AND MAY NOT BE SHARED WITH OTHERS EXCEPT AS REQUIRED TO FULFILL THE OBLIGATIONS OF YOUR CONTRACT WITH THE CITY OF PHOENIX.

PHX DVT CYR
CITY OF PHOENIX AVIATION DEPARTMENT
PHOENIX GOODYEAR AIRPORT
NEW APRON AND TAXIWAY CONNECTOR
AV41000077 FAA/ADOT

Designed by: NM
Drawn by: RB
Checked by: LM
Date: February 2023
Dwg scale: ---
CIP NO.(S): AV41000077 FAA/ADOT

Sheet Overview Title
GEOMETRY PLAN
BID ALT 4

Sheet Reference Number:
CG104

EXISTING ASPHALTIC CONCRETE PAVEMENT

PROPOSED FULL STRENGTH AC PAVEMENT STRUCTURAL SECTION

PROPOSED AC SHOULDER PAVEMENT STRUCTURAL SECTION

PROPOSED PCCP PAVEMENT STRUCTURAL SECTION

PROPOSED 12" TRENCH DRAIN

D3 LEGEND
NOT TO SCALE

1. CONTRACTOR IS PERMITTED TO CHANGE RECOMMENDED PAVING DIRECTION WITH APPROVAL OF RESIDENT ENGINEER PRIOR TO START OF PAVING OPERATION. IF CHANGE IS REQUESTED, CONTRACTOR SHALL PROVIDE NEW JOINT LAYOUT FOR REVIEW.
2. REFER TO PCC PAVEMENT JOINT DETAILS ON SHEETS CP-502 AND CP-503.

(B) THICKENED SLAB ISOLATION JOINT, C1/CP502

(D) SMOOTH DOWEL CONSTRUCTION JOINT, D1/CP502

(E) THICKENED PCCP/AC JOINT SEAL A4/CP502

(F) DOWELED CONTRACTION JOINT, D2/CP502

• REINFORCED PANEL, A3/CP502

ALL OTHER JOINTS SHALL BE CONSTRUCTED PER DETAIL C3/CP-502.

D4 PAVEMENT JOINT NOTES
NOT TO SCALE

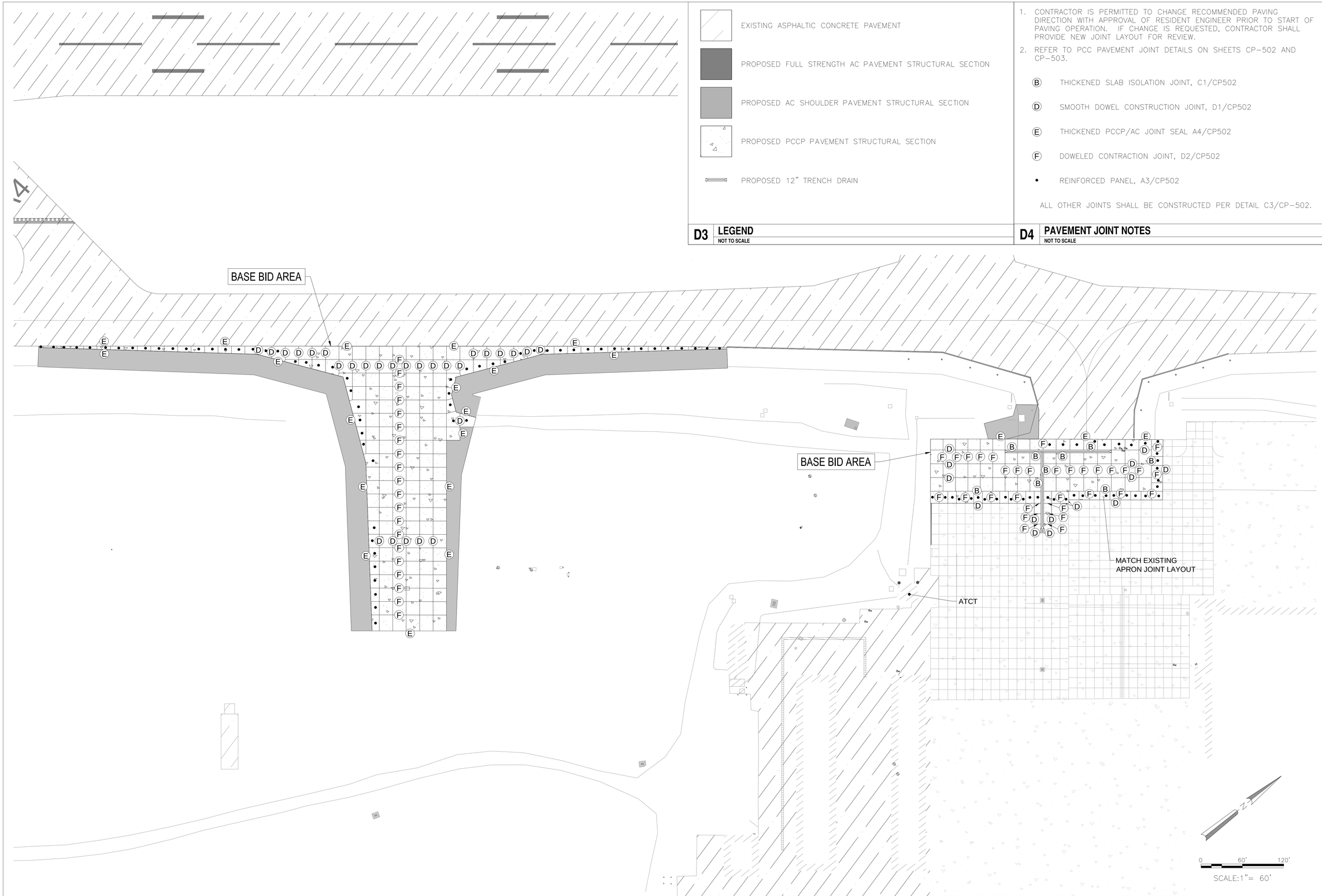

A1 JOINT LAYOUT PLAN
SCALE: 1" = 60'

PER CITY OF PHOENIX CODE CHAPTER 2, SECTION 2-28. THESE PLANS ARE FOR OFFICIAL USE ONLY AND MAY NOT BE SHARED WITH OTHERS EXCEPT AS REQUIRED TO FULFILL THE OBLIGATIONS OF CONTRACTOR'S CONTRACT WITH THE CITY OF PHOENIX.

C&S COMPANIES

Registered Professional Engineer (Civil)
CERTIFICATE NO. 33442
LANCE R. McINTOSH
Date Signed 02-06-23
ARIZONA U.S.A.
Expires: 3-31-23

NO.	REVISIONS / SUBMISSIONS	DATE

FOR CITY OF PHOENIX CITY CODE CHAPTER 2, SECTION 2-28 THESE PLANS ARE FOR OFFICIAL USE ONLY AND MAY NOT BE SHARED WITH OTHERS EXCEPT AS REQUIRED TO FULFILL THE OBLIGATIONS OF YOUR CONTRACT WITH THE CITY OF PHOENIX.

PHX DVT CYR
CITY OF PHOENIX AVIATION DEPARTMENT
PHOENIX GOODYEAR AIRPORT
NEW APRON AND TAXIWAY CONNECTOR
AV41000077 FAA/ADOT

Designed by: RB
Drawn by: RB
Checked by: LM
Date: February 2023
Dwg scale: ---
CIP NO.(S): AV41000077 FAA/ADOT

Sheet Overview Title
JOINT LAYOUT PLAN
BASE BID

Sheet Reference Number:
CG101

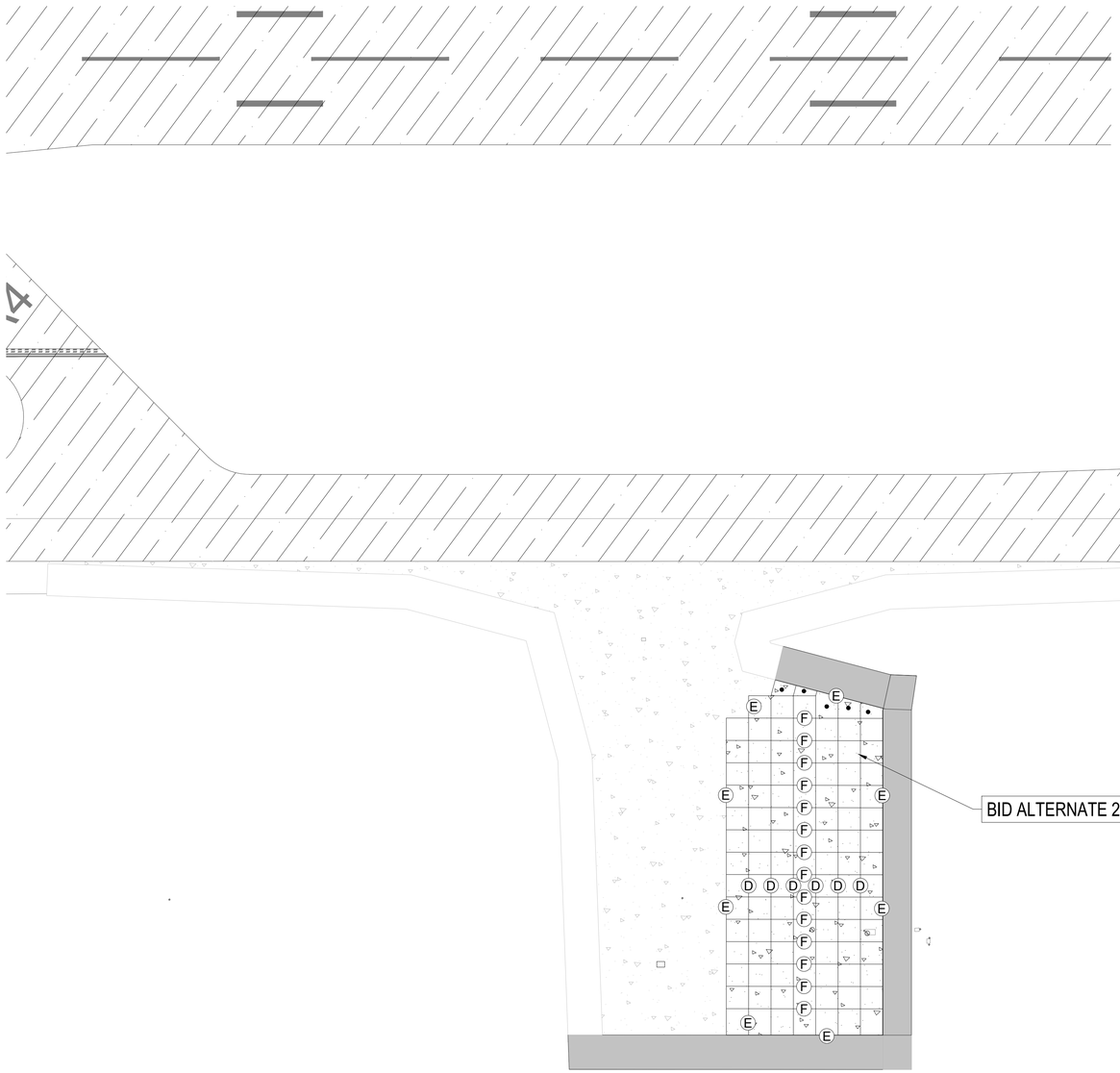

EXISTING ASPHALTIC CONCRETE PAVEMENT

PROPOSED FULL STRENGTH AC PAVEMENT STRUCTURAL SECTION

PROPOSED AC SHOULDER PAVEMENT STRUCTURAL SECTION

PROPOSED PCCP PAVEMENT STRUCTURAL SECTION

D3 LEGEND
NOT TO SCALE

1. CONTRACTOR IS PERMITTED TO CHANGE RECOMMENDED PAVING DIRECTION WITH APPROVAL OF RESIDENT ENGINEER PRIOR TO START OF PAVING OPERATION. IF CHANGE IS REQUESTED, CONTRACTOR SHALL PROVIDE NEW JOINT LAYOUT FOR REVIEW.
2. REFER TO PCC PAVEMENT JOINT DETAILS ON SHEETS CP-502 AND CP-503.

(D) SMOOTH DOWEL CONSTRUCTION JOINT, D1/CP502

(E) THICKENED PCCP/AC JOINT SEAL A4/CP502

(F) DOWELED CONTRACTION JOINT, D2/CP502

• REINFORCED PANEL, A3/CP502

ALL OTHER JOINTS SHALL BE CONSTRUCTED PER DETAIL C3/CP-502.

D4 PAVEMENT JOINT NOTES
NOT TO SCALE

0 60' 120'
SCALE:1"= 60'

A1 JOINT LAYOUT PLAN
SCALE: 1" = 60'

PER CITY OF PHOENIX CODE CHAPTER 2, SECTION 2-28. THESE PLANS ARE FOR OFFICIAL USE ONLY AND MAY NOT BE SHARED WITH OTHERS EXCEPT AS REQUIRED TO FULFILL THE OBLIGATIONS OF CONTRACTOR'S CONTRACT WITH THE CITY OF PHOENIX.

C&S COMPANIES

Registered Professional Engineer (Civil)
CERTIFICATE NO. 33442
LANCE R. McINTOSH
Date Signed 02-06-23
ARIZONA, U.S.A.
Expires: 3-31-23

NO.	REVISIONS / SUBMISSIONS	DATE

FOR CITY OF PHOENIX CITY CODE CHAPTER 2, SECTION 2-28 THESE PLANS ARE FOR OFFICIAL USE ONLY AND MAY NOT BE SHARED WITH OTHERS EXCEPT AS REQUIRED TO FULFILL THE OBLIGATIONS OF YOUR CONTRACT WITH THE CITY OF PHOENIX.

PHX DVT CITY OF PHOENIX AVIATION DEPARTMENT

PHOENIX GOODYEAR AIRPORT
NEW APRON AND TAXIWAY CONNECTOR
AV41000077 FAA/ADOT

Designed by: RB
Drawn by: RB
Checked by: LM
Date: February 2023
Dwg scale: ---
CIP NO.(S): AV41000077 FAA/ADOT

Sheet Overview Title
JOINT LAYOUT PLAN
BID ALT 2

Sheet Reference Number:
CG102

EXISTING ASPHALTIC CONCRETE PAVEMENT

PROPOSED FULL STRENGTH AC PAVEMENT STRUCTURAL SECTION

PROPOSED AC SHOULDER PAVEMENT STRUCTURAL SECTION

PROPOSED PCCP PAVEMENT STRUCTURAL SECTION

D3 LEGEND
NOT TO SCALE

1. CONTRACTOR IS PERMITTED TO CHANGE RECOMMENDED PAVING DIRECTION WITH APPROVAL OF RESIDENT ENGINEER PRIOR TO START OF PAVING OPERATION. IF CHANGE IS REQUESTED, CONTRACTOR SHALL PROVIDE NEW JOINT LAYOUT FOR REVIEW.
2. REFER TO PCC PAVEMENT JOINT DETAILS ON SHEETS CP-502 AND CP-503.

(D) SMOOTH DOWEL CONSTRUCTION JOINT, D1/CP502

(E) THICKENED PCCP/AC JOINT SEAL A4/CP502

(F) DOWELED CONTRACTION JOINT, D2/CP502

• REINFORCED PANEL, A3/CP502

ALL OTHER JOINTS SHALL BE CONSTRUCTED PER DETAIL C3/CP-502.

D4 PAVEMENT JOINT NOTES
NOT TO SCALE

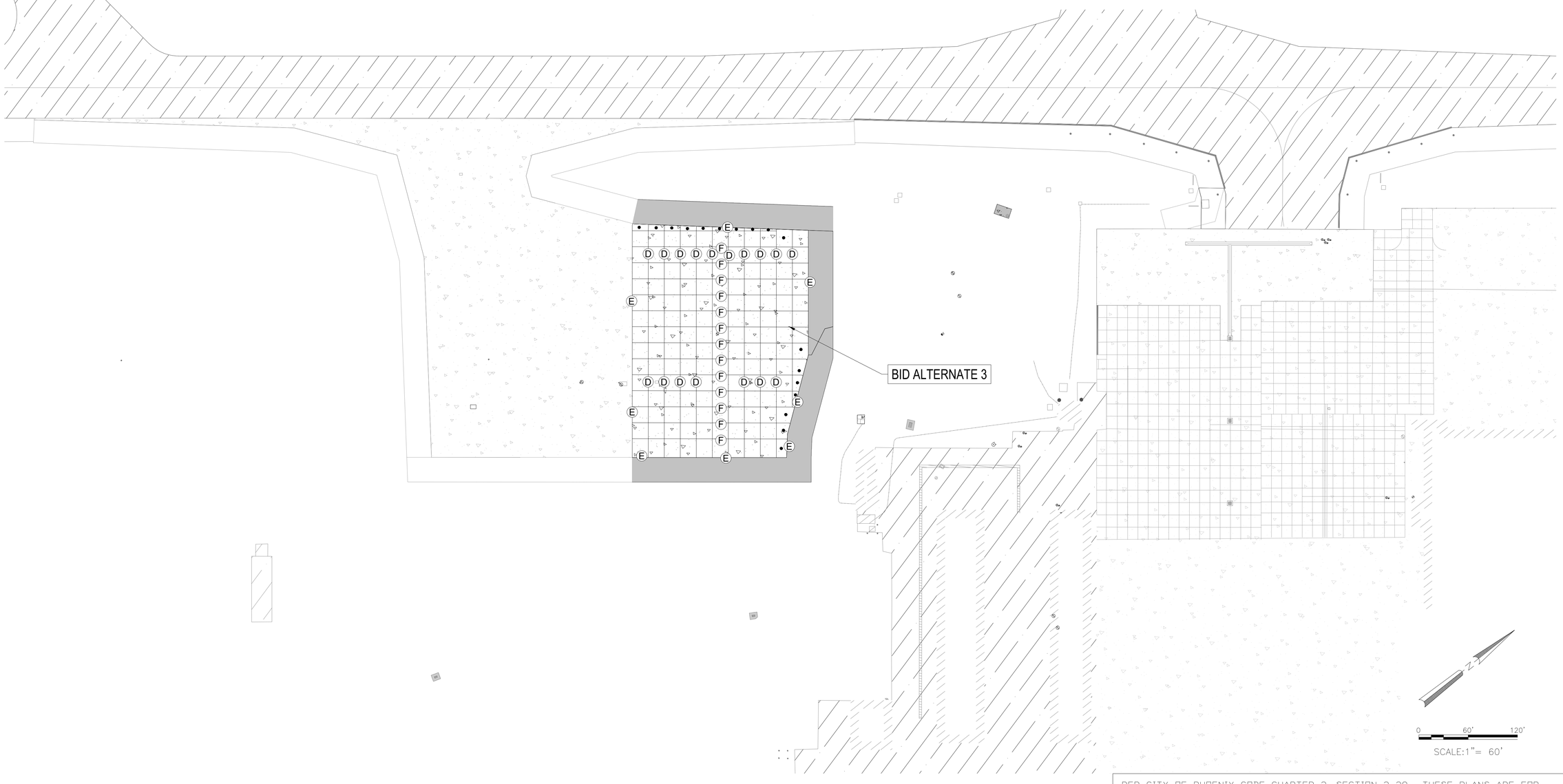

A1 JOINT LAYOUT PLAN
SCALE: 1" = 60'

PER CITY OF PHOENIX CODE CHAPTER 2, SECTION 2-28. THESE PLANS ARE FOR OFFICIAL USE ONLY AND MAY NOT BE SHARED WITH OTHERS EXCEPT AS REQUIRED TO FULFILL THE OBLIGATIONS OF CONTRACTOR'S CONTRACT WITH THE CITY OF PHOENIX.

C&S COMPANIES

Registered Professional Engineer (Civil) CERTIFICATE NO. 33442 LANCE R. McINTOSH Date Signed 02-28-23 ARIZONA U.S.A.
Expires: 3-31-23

NO.	REVISIONS / SUBMISSIONS	DATE

FOR CITY OF PHOENIX CITY CODE CHAPTER 2, SECTION 2-28 THESE PLANS ARE FOR OFFICIAL USE ONLY AND MAY NOT BE SHARED WITH OTHERS EXCEPT AS REQUIRED TO FULFILL THE OBLIGATIONS OF YOUR CONTRACT WITH THE CITY OF PHOENIX.

PHX DVT CYR
CITY OF PHOENIX AVIATION DEPARTMENT
PHOENIX GOODYEAR AIRPORT
NEW APRON AND TAXIWAY CONNECTOR
AV41000077 FAA/ADOT

Designed by: RB
Drawn by: RB
Checked by: LM
Date: February 2023
Dwg scale: ---
CIP NO.(S): AV41000077 FAA/ADOT

Sheet Overview Title
JOINT LAYOUT PLAN
BIT ALT 3

Sheet Reference Number:
CG103

EXISTING ASPHALTIC CONCRETE PAVEMENT

PROPOSED FULL STRENGTH AC PAVEMENT STRUCTURAL SECTION

PROPOSED AC SHOULDER PAVEMENT STRUCTURAL SECTION

PROPOSED PCCP PAVEMENT STRUCTURAL SECTION

D3 LEGEND
NOT TO SCALE

1. CONTRACTOR IS PERMITTED TO CHANGE RECOMMENDED PAVING DIRECTION WITH APPROVAL OF RESIDENT ENGINEER PRIOR TO START OF PAVING OPERATION. IF CHANGE IS REQUESTED, CONTRACTOR SHALL PROVIDE NEW JOINT LAYOUT FOR REVIEW.
2. REFER TO PCC PAVEMENT JOINT DETAILS ON SHEETS CP-502 AND CP-503.

(D) SMOOTH DOWEL CONSTRUCTION JOINT, D1/CP502

(E) THICKENED PCCP/AC JOINT SEAL A4/CP502

(F) DOWELED CONTRACTION JOINT, D2/CP502

• REINFORCED PANEL, A3/CP502

ALL OTHER JOINTS SHALL BE CONSTRUCTED PER DETAIL C3/CP-502.

D4 PAVEMENT JOINT NOTES
NOT TO SCALE

A1 JOINT LAYOUT PLAN
SCALE: 1" = 60'

PER CITY OF PHOENIX CODE CHAPTER 2, SECTION 2-28. THESE PLANS ARE FOR OFFICIAL USE ONLY AND MAY NOT BE SHARED WITH OTHERS EXCEPT AS REQUIRED TO FULFILL THE OBLIGATIONS OF CONTRACTOR'S CONTRACT WITH THE CITY OF PHOENIX.

C&S COMPANIES

Registered Professional Engineer (Civil)
CERTIFICATE NO. 33442
LANCE R. McINTOSH
Date Signed 02-06-23
ARIZONA, U.S.A.
Expires: 3-31-23

PER CITY OF PHOENIX CITY CODE CHAPTER 2, SECTION 2-28 THESE PLANS ARE FOR OFFICIAL USE ONLY AND MAY NOT BE SHARED WITH OTHERS EXCEPT AS REQUIRED TO FULFILL THE OBLIGATIONS OF YOUR CONTRACT WITH THE CITY OF PHOENIX.

NO.	REVISIONS / SUBMISSIONS	DATE

PHX DVT CYR
CITY OF PHOENIX AVIATION DEPARTMENT
PHOENIX GOODYEAR AIRPORT
NEW APRON AND TAXIWAY CONNECTOR
AV41000077 FAA/ADOT

Designed by: RB
Drawn by: RB
Checked by: LM
Date: February 2023
Dwg scale: ---
CIP NO.(S): AV41000077 FAA/ADOT

Sheet Overview Title
JOINT LAYOUT PLAN
BID ALT 4

Sheet Reference Number:
CG104

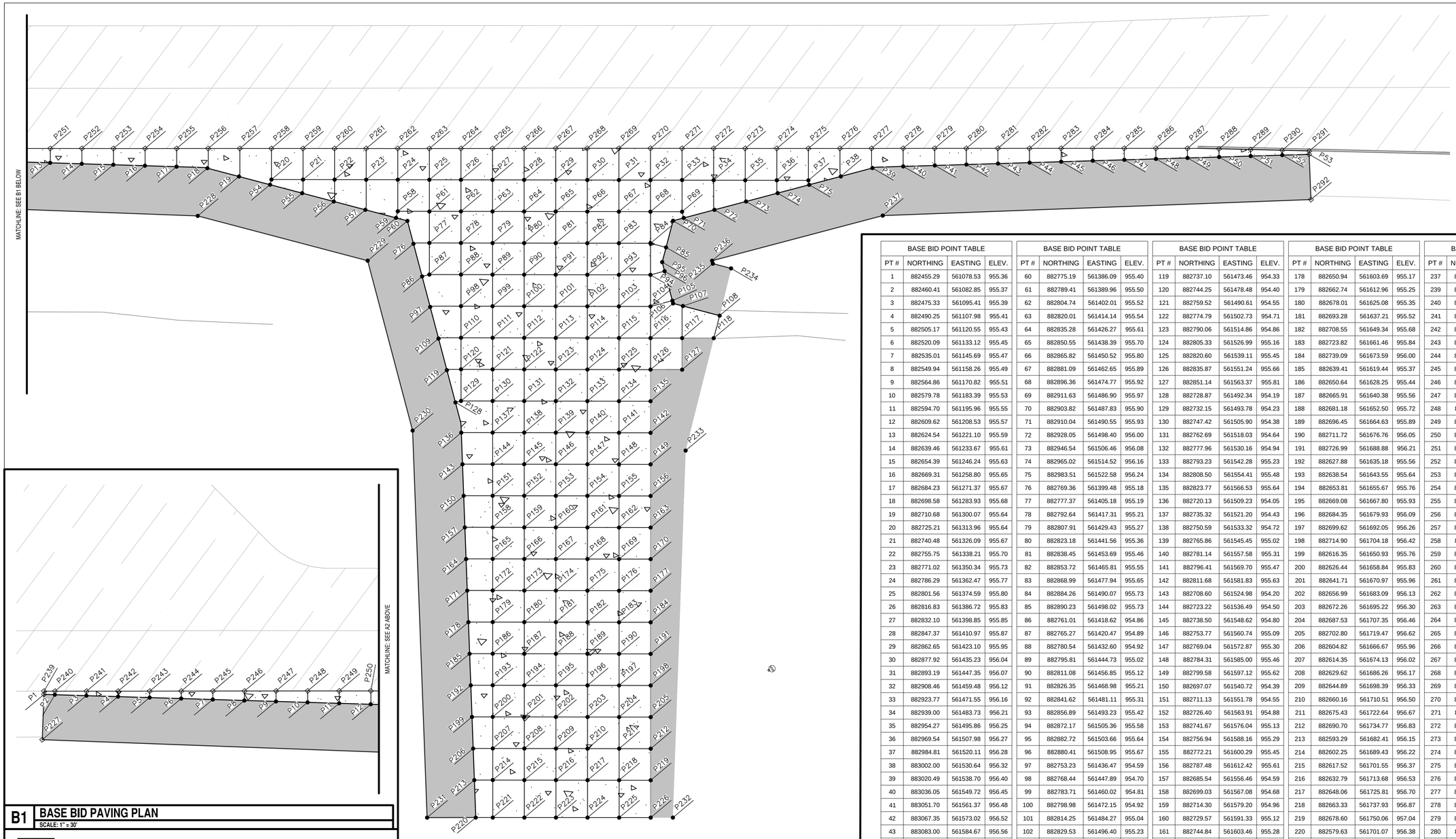

B1 BASE BID PAVING PLAN
SCALE: 1" = 30'

- EXISTING ASPHALTIC CONCRETE PAVEMENT
- EXISTING CONCRETE PAVEMENT
- PROPOSED FULL STRENGTH AC PAVEMENT STRUCTURAL SECTION
- PROPOSED AC SHOULDER PAVEMENT STRUCTURAL SECTION
- PROPOSED PCCP PAVEMENT STRUCTURAL SECTION
- P121 PAVEMENT ELEVATION POINT, FINISHED GRADE MEETS EXISTING GRADE
- P120 PAVEMENT ELEVATION POINT AT FINISHED GRADE

A1 LEGEND
NOT TO SCALE

A2 BASE BID PAVING PLAN
SCALE: 1" = 30'

0 30' 60'

SCALE: 1"= 30'

A3 BASE BID POINT TABLE
NOT TO SCALE

BASE BID POINT TABLE			
PT #	NORTHING	EASTING	ELEV.
1	882455.29	561078.53	955.36
2	882460.41	561082.85	955.37
3	882475.33	561095.41	955.39
4	882490.25	561107.98	955.41
5	882505.17	561120.55	955.43
6	882520.09	561133.12	955.45
7	882535.01	561145.69	955.47
8	882549.94	561158.26	955.49
9	882564.86	561170.82	955.51
10	882579.78	561183.39	955.53
11	882594.70	561195.96	955.55
12	882609.62	561208.53	955.57
13	882624.54	561221.10	955.59
14	882639.46	561233.67	955.61
15	882654.39	561246.24	955.63
16	882669.31	561258.80	955.65
17	882684.23	561271.37	955.67
18	882698.58	561283.93	955.68
19	882710.68	561300.07	955.64
20	882725.21	561313.96	955.64
21	882740.48	561326.09	955.67
22	882755.75	561338.21	955.70
23	882771.02	561350.34	955.73
24	882786.29	561362.47	955.77
25	882801.56	561374.59	955.80
26	882816.83	561386.72	955.83
27	882832.10	561398.85	955.85
28	882847.37	561410.97	955.87
29	882862.65	561423.10	955.95
30	882877.92	561435.23	956.04
31	882893.19	561447.35	956.07
32	882908.46	561459.48	956.12
33	882923.77	561471.55	956.16
34	882939.00	561483.73	956.21
35	882954.27	561495.86	956.25
36	882969.54	561507.98	956.27
37	882984.81	561520.11	956.28
38	883002.00	561530.64	956.32
39	883020.49	561538.70	956.40
40	883036.05	561549.72	956.45
41	883051.70	561561.37	956.48
42	883067.35	561573.02	956.52
43	883083.00	561584.67	956.56
44	883098.65	561596.31	956.60
45	883114.30	561607.96	956.64
46	883129.95	561619.61	956.67
47	883145.60	561631.26	956.71
48	883161.25	561642.91	956.75
49	883176.90	561654.56	956.79
50	883192.55	561666.20	956.82
51	883208.19	561677.85	956.86
52	883223.84	561689.50	956.90
53	883237.18	561699.43	956.93
54	882722.58	561315.93	955.59
55	882734.88	561332.34	955.55
56	882746.98	561348.47	955.50
57	882759.08	561364.61	955.46
58	882774.19	561377.76	955.47
59	882770.83	561380.28	955.41

BASE BID POINT TABLE			
PT #	NORTHING	EASTING	ELEV.
60	882775.19	561386.09	955.40
61	882789.41	561389.96	955.50
62	882804.74	561402.01	955.52
63	882820.01	561414.14	955.54
64	882835.28	561426.27	955.61
65	882850.55	561438.39	955.70
66	882865.82	561450.52	955.80
67	882881.09	561462.65	955.89
68	882896.36	561474.77	955.92
69	882911.63	561486.90	955.97
70	882903.82	561487.83	955.90
71	882910.04	561490.55	955.93
72	882928.05	561498.40	956.00
73	882946.54	561506.46	956.08
74	882965.02	561514.52	956.16
75	882983.51	561522.58	956.24
76	882769.36	561399.48	955.18
77	882777.37	561405.18	955.19
78	882792.64	561417.31	955.21
79	882807.91	561429.43	955.27
80	882823.18	561441.56	955.36
81	882838.45	561453.69	955.46
82	882853.72	561465.81	955.55
83	882868.99	561477.94	955.65
84	882884.26	561490.07	955.73
85	882890.23	561498.02	955.73
86	882761.01	561418.62	954.86
87	882765.27	561420.47	954.89
88	882780.54	561432.60	954.92
89	882795.81	561444.73	955.02
90	882811.08	561456.85	955.12
91	882826.35	561468.98	955.21
92	882841.62	561481.11	955.31
93	882856.89	561493.23	955.42
94	882872.17	561505.36	955.58
95	882882.72	561503.66	955.64
96	882880.41	561508.95	955.67
97	882753.23	561436.47	954.59
98	882768.44	561447.89	954.70
99	882783.71	561460.02	954.81
100	882798.98	561472.15	954.92
101	882814.25	561484.27	955.04
102	882829.53	561496.40	955.23
103	882844.80	561508.53	955.44
104	882860.07	561520.65	955.65
105	882872.87	561526.24	955.78
106	882872.18	561527.83	955.79
107	882875.94	561532.85	955.84
108	882890.00	561551.59	956.00
109	882745.16	561454.97	954.46
110	882756.34	561463.19	954.54
111	882771.61	561475.32	954.67
112	882786.88	561487.45	954.88
113	882802.15	561499.57	955.03
114	882817.42	561511.70	955.19
115	882832.69	561523.83	955.37
116	882847.96	561535.96	955.67
117	882863.23	561548.09	955.82
118	882878.50	561560.21	955.96

BASE BID POINT TABLE			
PT #	NORTHING	EASTING	ELEV.
119	882737.10	561473.46	954.33
120	882744.25	561478.48	954.40
121	882759.52	561490.61	954.55
122	882774.79	561502.73	954.71
123	882790.06	561514.86	954.86
124	882805.33	561526.99	955.16
125	882820.60	561539.11	955.45
126	882835.87	561551.24	955.66
127	882851.14	561563.37	955.81
128	882728.87	561492.34	954.19
129	882732.15	561493.78	954.23
130	882747.42	561505.90	954.38
131	882762.69	561518.03	954.64
132	882777.96	561530.16	954.94
133	882793.23	561542.28	955.23
134	882808.50	561554.41	955.48
135	882823.77	561566.53	955.64
136	882720.13	561509.23	954.05
137	882735.32	561521.20	954.43
138	882750.59	561533.32	954.72
139	882765.86	561545.45	955.02
140	882781.14	561557.58	955.31
141	882796.41	561569.70	955.47
142	882811.68	561581.83	955.63
143	882708.60	561524.98	954.20
144	882723.22	561536.49	954.50
145	882738.50	561548.62	954.80
146	882753.77	561560.74	955.09
147	882769.04	561572.87	955.30
148	882784.31	561585.00	955.46
149	882799.58	561597.12	955.62
150	882697.07	561540.72	954.39
151	882711.13	561551.78	954.55
152	882726.40	561563.91	954.88
153	882741.67	561576.04	955.13
154	882756.94	561588.16	955.29
155	882772.21	561600.29	955.45
156	882787.48	561612.42	955.61
157	882685.54	561556.46	954.59
158	882699.03	561567.08	954.68
159	882714.30	561579.20	954.96
160	882729.57	561591.33	955.12
161	882744.84	561603.46	955.28
162	882760.11	561615.58	955.44
163	882775.38	561627.71	955.60
164	882674.01	561572.21	954.78
165	882686.93	561582.37	954.87
166	882702.20	561594.50	955.09
167	882717.47	561606.62	955.25
168	882732.74	561618.75	955.41
169	882748.02	561630.88	955.57
170	882763.29	561643.00	955.73
171	882662.48	561587.95	954.98
172	882674.83	561597.66	955.06
173	882690.11	561609.79	955.22
174	882705.38	561621.92	955.38
175	882720.65	561634.04	955.54
176	882735.92	561646.17	955.71
177	882751.19	561658.30	955.87

BASE BID POINT TABLE			
PT #	NORTHING	EASTING	ELEV.
178	882650.94	561603.69	955.17
179	882662.74	561612.96	955.25
180	882678.01	561625.08	955.35
181	882693.28	561637.21	955.52
182	882708.55	561649.34	955.68
183	882723.82	561661.46	955.84
184	882739.09	561673.59	956.00
185	882639.41	561619.44	955.37
186	882650.64	561628.25	955.44
187	882665.91	561640.38	955.56
188	882681.18	561652.50	955.72
189	882696.45	561664.63	955.89
190	882711.72	561676.76	956.05
191	882726.99	561688.88	956.21
192	882627.88	561635.18	955.56
193	882638.54	561643.55	955.64
194	882653.81	561655.67	955.76
195	882669.08	561667.80	955.93
196	882684.35	561679.93	956.09
197	882699.62	561692.05	956.26
198	882714.90	561704.18	956.42
199	882616.35	561650.93	955.76
200	882626.44	561658.84	955.83
201	882641.71	561670.97	955.96
202	882656.99	561683.09	956.13
203	882672.26	561695.22	956.30
204	882687.53	561707.35	956.46
205	882702.80	561719.47	956.62
206	882604.82	561666.67	955.96
207	882614.35	561674.13	956.02
208	882629.62	561686.26	956.17
209	882644.89	561698.39	956.33
210	882660.16	561710.51	956.50
211	882675.43	561722.64	956.67
212	882690.70	561734.77	956.83
213	882593.29	561682.41	956.15
214	882602.25	561689.43	956.22
215	882617.52	561701.55	956.37
216	882632.79	561713.68	956.53
217	882648.06	561725.81	956.70
218	882663.33	561737.93	956.87
219	882678.60	561750.06	957.04
220	882579.63	561701.07	956.38
221	882587.88	561707.60	956.46
222	882603.16	561719.70	956.61
223	882618.45	561731.81	956.77
224	882633.74	561743.92	956.94
225	882649.02	561756.02	957.11
226	882664.31	561768.13	957.28
227	882437.06	561099.79	954.64
228	882675.62	561303.32	954.17
229	882740.71	561390.11	953.89
230	882697.36	561489.56	952.61
231	882556.08	561682.44	954.87
232	882675.05	561776.63	957.40
233	882821.85	561603.88	955.80
234	882913.65	561533.12	954.39
235	882906.66	561523.81	954.29
236	882907.39	561522.12	954.39

BASE BID POINT TABLE			
PT #	NORTHING	EASTING	ELEV.
237	883007.28	561565.67	954.91
239	882456.52	561076.97	955.41
240	882461.82	561081.17	955.41
241	882477.10	561093.27	955.42
242	882492.39	561105.38	955.43
243	882507.68	561117.48	955.44
244	882522.98	561129.56	955.46
245	882538.29	561141.65	955.47
246	882553.60	561153.73	955.51
247	882568.90	561165.81	955.55
248	882584.21	561177.89	955.60
249	882599.50	561189.99	955.64
250	882614.80	561202.08	955.68
251	882630.09	561214.18	955.72
252	882645.38	561226.29	955.75
253	882660.66	561238.40	955.78
254	882675.95	561250.50	955.81
255	882691.24	561262.60	955.84
256	882706.53	561274.70	955.86
257	882721.82	561286.81	955.89
258	882737.11	561298.91	955.92
259	882752.40	561311.02	955.96
260	882767.68	561323.13	955.99
261	882782.96	561335.24	956.02
262	882798.25	561347.35	956.06
263	882813.54	561359.44	956.09
264	882828.84	561371.54	956.12
265	882844.15	561383.62	956.15
266	882859.45	561395.70	956.17
267	882874.76	561407.78	956.19
268	882890.06	561419.87	956.22
269	882905.35	561431.98	956.27
270	882920.63	561444.09	956.31
271	882935.91	561456.21	956.36
272	882951.18	561468.33	956.41
273	882966.45	561480.46	956.46
274	882981.73	561492.57	956.50
275	882997.03	561504.67	956.53
276	883012.32	561516.77	956.57
277	883027.62	561528.86	956.59
278	883042.92	561540.95	956.59
279	883058.22	561553.04	956.60
280	883073.51	561565.14	956.62
281	883088.79	561577.25	956.64
282	883104.08	561589.36	956.67
283	883119.37	561601.46	956.71
284	883134.67	561613.55	956.76
285	883149.95	561625.66	956.80
286	883165.23	561637.77	956.85
287	883180.52	561649.89	956.89
288	883195.61	561662.23	956.91
289	883210.63	561674.68	956.94
290	883225.64	561687.14	956.96
291	883238.41	561697.85	956.98
292	883220.72	561722.00	956.19

PER CITY OF PHOENIX CODE CHAPTER 2, SECTION 2-28. THESE PLANS ARE FOR OFFICIAL USE ONLY AND MAY NOT BE SHARED WITH OTHERS EXCEPT AS REQUIRED TO FULFILL THE OBLIGATIONS OF YOUR CONTRACT WITH THE CITY OF PHOENIX.

PER CITY OF PHOENIX CODE CHAPTER 2, SECTION 2-28. THESE PLANS ARE FOR OFFICIAL USE ONLY AND MAY NOT BE SHARED WITH OTHERS EXCEPT AS REQUIRED TO FULFILL THE OBLIGATIONS OF CONTRACTOR'S CONTRACT WITH THE CITY OF PHOENIX.

C&S COMPANIES

Registered Professional Engineer (Civil) CERTIFICATE NO. 33442 LANCE R. McINTOSH Date Signed 02-06-23 ARIZONA, U.S.A.
Expires: 3-31-23

NO.	REVISIONS / SUBMISSIONS	DATE

PHX INT'L ARPT
CITY OF PHOENIX AVIATION DEPARTMENT
PHOENIX GOODYEAR AIRPORT
NEW APRON AND TAXIWAY CONNECTOR
AV41000077 FAA/ADOT

Designed by: NM
Drawn by: RB
Checked by: LM
Date: February 2023
Dwg scale: ---
CIP NO.(S): AV41000077 FAA/ADOT

Sheet Overview Title
PAVING PLAN
BASE BID

Sheet Reference Number:
CP101

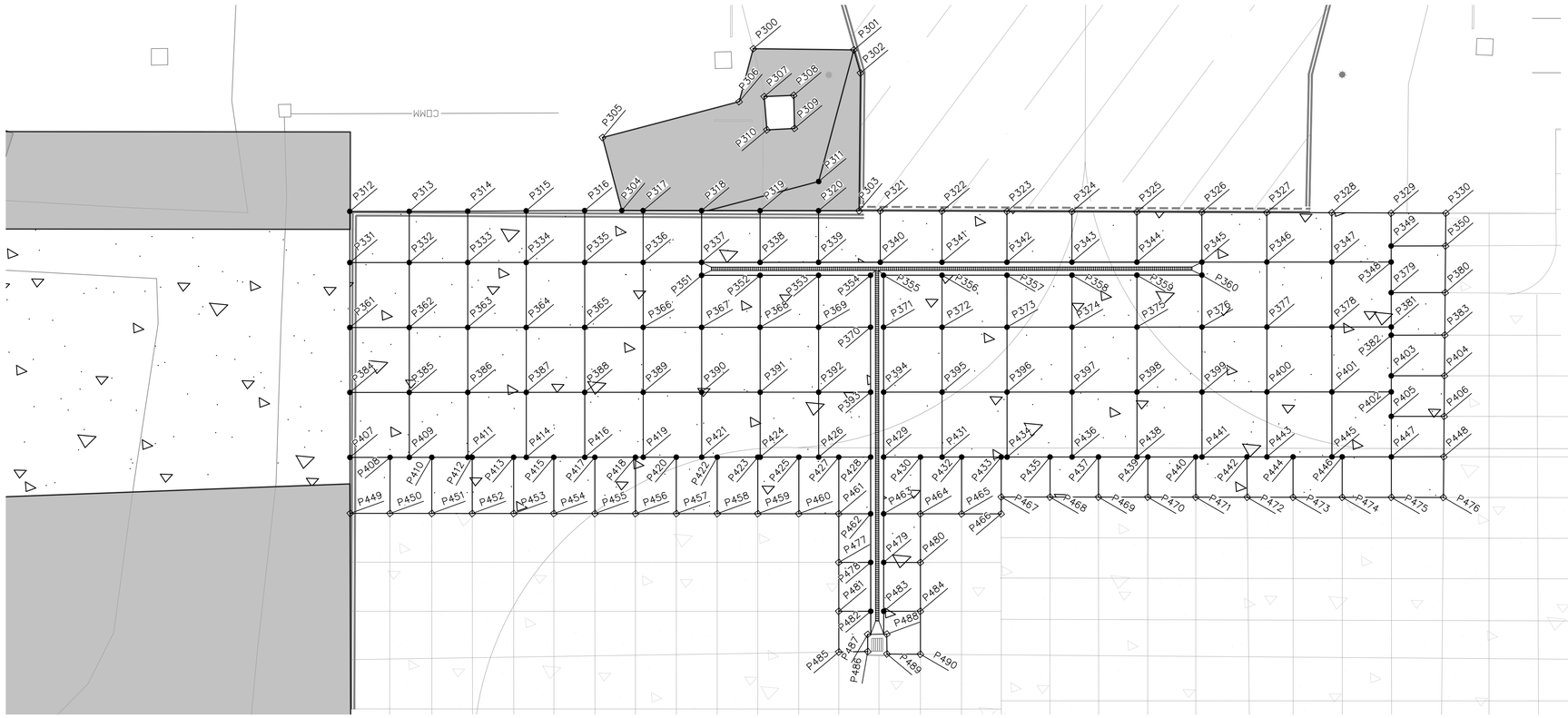

C1 BID ALT 2 PAVING PLAN

SCALE: 1" = 20'

ADD ALT. #1 POINT TABLE			
PT #	NORTHING	EASTING	ELEV.
300	883516.16	562023.12	956.78
301	883540.21	562042.62	957.09
302	883537.38	562049.46	957.12
303	883510.72	562082.46	957.00
304	883453.50	562037.08	957.97
305	883462.79	562015.75	956.81
306	883502.63	562033.20	956.70
307	883509.64	562036.75	957.29
308	883517.01	562042.10	957.34
309	883510.86	562050.24	957.23
310	883503.93	562045.31	957.25
311	883506.57	562067.67	957.20
312	883387.68	561985.29	958.92
313	883402.03	561996.64	958.75
314	883416.18	562007.76	958.54
315	883430.36	562018.85	958.33
316	883444.52	562029.97	958.12
317	883458.63	562041.14	957.89
318	883472.73	562052.33	957.64
319	883486.83	562063.52	957.40
320	883500.94	562074.70	957.16
321	883515.81	562086.53	956.93
322	883530.66	562098.38	956.73
323	883546.28	562110.86	956.52
324	883561.91	562123.34	956.31
325	883577.54	562135.82	956.45
326	883593.17	562148.30	956.55
327	883608.80	562160.78	956.55
328	883624.43	562173.27	956.53
329	883638.64	562184.72	956.65

ADD ALT. #1 POINT TABLE			
PT #	NORTHING	EASTING	ELEV.
330	883651.86	562195.17	956.71
331	883377.90	561997.65	958.94
332	883392.25	562009.00	958.72
333	883406.37	562020.17	958.51
334	883420.49	562031.33	958.28
335	883434.61	562042.50	958.07
336	883448.73	562053.66	957.72
337	883462.85	562064.83	957.37
338	883476.96	562075.99	957.12
339	883491.08	562087.16	956.85
340	883505.99	562098.95	956.59
341	883520.89	562110.73	956.47
342	883536.58	562123.14	956.34
343	883552.26	562135.54	956.21
344	883567.95	562147.95	956.32
345	883583.64	562160.36	956.42
346	883599.32	562172.76	956.52
347	883615.01	562185.17	956.64
348	883629.33	562196.50	956.75
349	883632.39	562192.62	956.72
350	883645.54	562203.00	956.80
351	883460.37	562067.97	957.35
352	883474.48	562079.13	957.08
353	883488.60	562090.30	956.81
354	883501.15	562100.22	956.57
355	883504.29	562102.70	956.55
356	883518.41	562113.87	956.45
357	883534.09	562126.28	956.33
358	883549.78	562138.68	956.21
359	883565.47	562151.09	956.32

ADD ALT. #1 POINT TABLE			
PT #	NORTHING	EASTING	ELEV.
360	883581.16	562163.49	956.43
361	883365.50	562013.34	958.90
362	883379.85	562024.69	958.69
363	883393.97	562035.85	958.45
364	883408.09	562047.02	958.22
365	883422.20	562058.18	957.99
366	883436.32	562069.35	957.65
367	883450.44	562080.52	957.32
368	883464.56	562091.68	957.04
369	883478.68	562102.85	956.74
370	883491.23	562112.77	956.51
371	883494.36	562115.25	956.49
372	883508.48	562126.42	956.60
373	883524.17	562138.83	956.45
374	883539.86	562151.23	956.32
375	883555.54	562163.64	956.42
376	883571.23	562176.04	956.53
377	883586.92	562188.45	956.65
378	883602.60	562200.86	956.79
379	883623.48	562203.90	956.82
380	883636.52	562214.20	956.93
381	883616.93	562212.19	956.90
382	883615.36	562214.18	956.92
383	883628.31	562224.39	957.02
384	883353.09	562029.02	958.86
385	883367.44	562040.37	958.63
386	883381.56	562051.54	958.39
387	883395.68	562062.71	958.16
388	883409.80	562073.87	957.92
389	883423.92	562085.04	957.58

ADD ALT. #1 POINT TABLE			
PT #	NORTHING	EASTING	ELEV.
390	883438.03	562096.20	957.29
391	883452.15	562107.37	957.00
392	883466.27	562118.53	956.70
393	883478.82	562128.46	956.44
394	883481.96	562130.94	956.41
395	883496.08	562142.11	956.50
396	883511.76	562154.51	956.60
397	883527.45	562166.92	956.46
398	883543.14	562179.33	956.55
399	883558.82	562191.73	956.67
400	883574.51	562204.14	956.76
401	883590.20	562216.54	956.89
402	883604.53	562227.88	957.02
403	883607.60	562224.00	956.99
404	883620.45	562234.14	957.10
405	883599.86	562233.79	957.06
406	883612.60	562243.89	957.19
407	883340.68	562044.71	958.83
408	883350.38	562052.38	958.66
409	883355.04	562056.06	958.57
410	883360.46	562060.35	958.48
411	883369.15	562067.23	958.33
412	883370.21	562068.06	958.31
413	883380.23	562075.99	958.15
414	883383.27	562078.39	958.09
415	883389.91	562083.64	957.98
416	883397.39	562089.56	957.85
417	883399.83	562091.49	957.80
418	883409.63	562099.24	957.58
419	883411.51	562100.72	957.55

ADD ALT. #1 POINT TABLE			
PT #	NORTHING	EASTING	ELEV.
420	883419.49	562107.04	957.39
421	883425.63	562111.89	957.26
422	883429.38	562114.86	957.18
423	883439.17	562122.60	956.97
424	883439.75	562123.06	956.96
425	883449.08	562130.44	956.76
426	883453.86	562134.22	956.66
427	883458.72	562138.06	956.57
428	883466.41	562144.15	956.37
429	883469.55	562146.63	956.33
430	883478.43	562153.65	956.37
431	883483.67	562157.79	956.40
432	883488.39	562161.52	956.42
433	883497.95	562169.08	956.48
434	883499.36	562170.20	956.49
435	883509.73	562178.40	956.56
436	883515.04	562182.61	956.60
437	883521.42	562187.65	956.63
438	883530.73	562195.01	956.68
439	883533.34	562197.08	956.69
440	883544.91	562206.22	956.79
441	883546.42	562207.42	956.80
442	883557.27	562216.00	956.84
443	883562.11	562219.82	956.87
444	883568.41	562224.81	956.91
445	883577.79	562232.23	957.00
446	883580.27	562234.19	957.02
447	883592.13	562243.57	957.14
448	883604.80	562253.57	957.27
449	883330.05	562058.30	958.81

ADD ALT. #1 POINT TABLE			
PT #	NORTHING	EASTING	ELEV.
450	883339.64	562065.90	958.63
451	883349.73	562073.91	958.45
452	883359.49	562081.64	958.27
453	883369.48	562089.56	958.09
454	883379.16	562097.24	957.92
455	883389.07	562105.09	957.75
456	883398.86	562112.85	957.57
457	883408.71	562120.67	957.37
458	883418.58	562128.49	957.15
459	883428.36	562136.25	956.94
460	883438.26	562144.10	956.76
461	883447.89	562151.74	956.59
462	883455.59	562157.84	956.31
463	883458.72	562160.32	956.27
464	883467.58	562167.35	956.35
465	883477.52	562175.23	956.34
466	883487.06	562182.79	956.43
467	883490.30	562178.75	956.42
468	883502.06	562188.08	956.54
469	883513.75	562197.35	956.65
470	883525.65	562206.79	956.77
471	883537.21	562215.96	956.88
472	883549.63	562225.81	0.00
473	883560.68	562234.58	956.98
474	883572.53	562243.98	957.10
475	883584.38	562253.38	957.22
476	883596.93	562263.33	0.00
477	883438.59	562163.48	956.51
478	883446.29	562169.59	956.30
479	883449.43	562172.07	956.26

ADD ALT. #1 POINT TABLE			
PT #	NORTHING	EASTING	ELEV.
480	883458.29	562179.09	956.28
481	883429.25	562175.29	956.43
482	883436.96	562181.39	956.29
483	883440.10	562183.87	956.27
484	883448.95	562190.88	956.32
485	883421.47	562185.12	956.56
486	883428.54	562190.54	956.42
487	883431.80	562186.40	956.26
488	883436.47	562189.96	956.26
489	883432.71	562194.81	956.38
490	883440.73	562201.26	956.46

A1 BID ALT 2 POINT TABLE

NOT TO SCALE

PER CITY OF PHOENIX CODE CHAPTER 2, SECTION 2-28. THESE PLANS ARE FOR OFFICIAL USE ONLY AND MAY NOT BE SHARED WITH OTHERS EXCEPT AS REQUIRED TO FULFILL THE OBLIGATIONS OF CONTRACTOR'S CONTRACT WITH THE CITY OF PHOENIX.

C&S COMPANIES

Registered Professional Engineer (Civil) CERTIFICATE NO. 33442 LANCE R. McINTOSH Date Signed 02-08-23 ARIZONA, U.S.A.

Expires: 3-31-23

NO.	REVISIONS / SUBMISSIONS	DATE

PER CITY OF PHOENIX CODE CHAPTER 2, SECTION 2-28. THESE PLANS ARE FOR OFFICIAL USE ONLY AND MAY NOT BE SHARED WITH OTHERS EXCEPT AS REQUIRED TO FULFILL THE OBLIGATIONS OF YOUR CONTRACT WITH THE CITY OF PHOENIX.

PHX DVT CYR

CITY OF PHOENIX AVIATION DEPARTMENT

PHOENIX GOODYEAR AIRPORT
NEW APRON AND TAXIWAY CONNECTOR

AV41000077 FAA/ADOT

Designed by: NM
Drawn by: RB
Checked by: LM
Date: February 2023
Dwg scale: ---

CIP NO.(S): AV41000077 FAA/ADOT

Sheet Overview Title

PAVING PLAN
BASE BID

Sheet Reference Number:

CP102

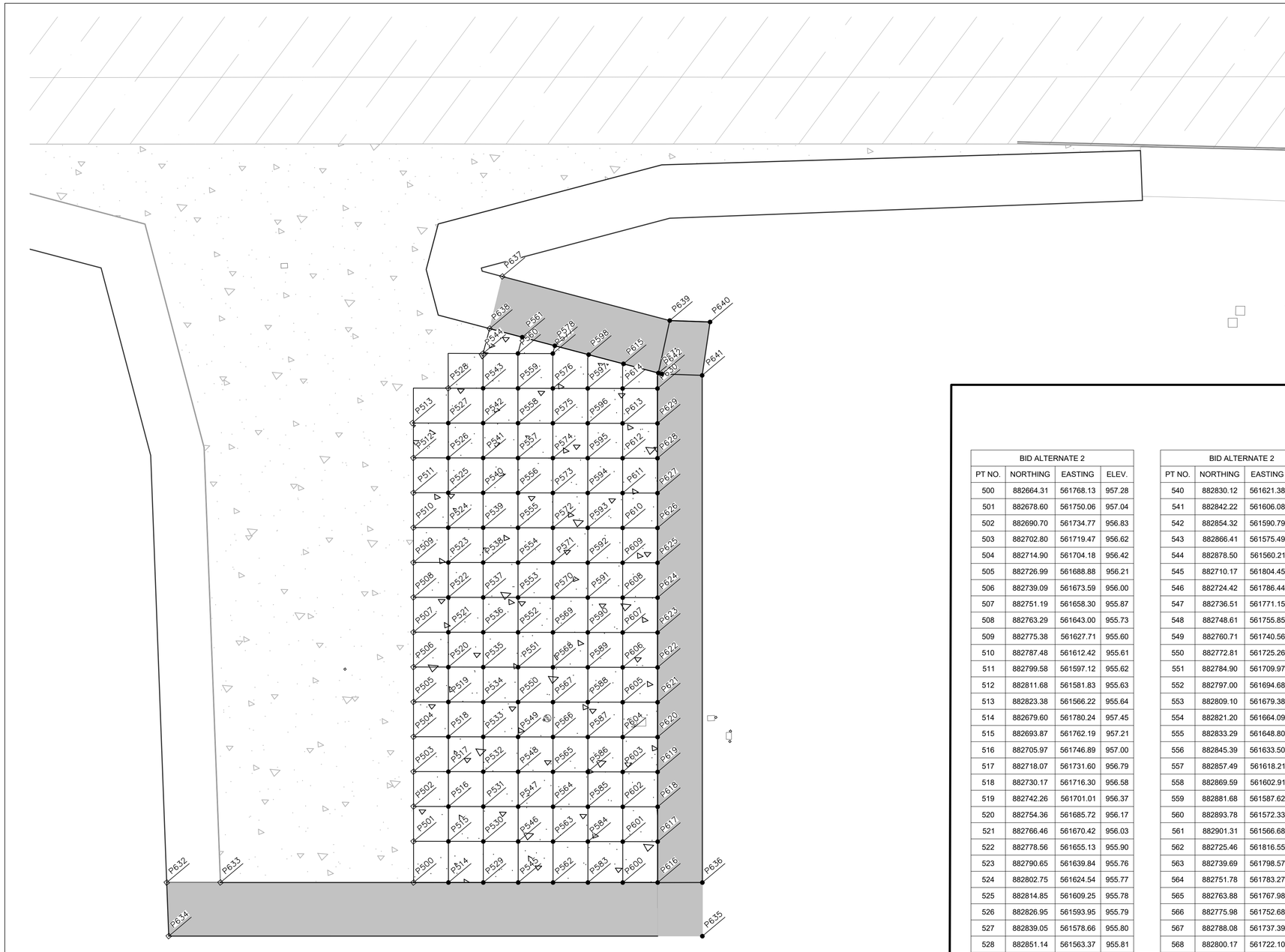

A1 BASE BID PAVING PLAN

SCALE: 1" = 30'

- EXISTING ASPHALTIC CONCRETE PAVEMENT
- EXISTING CONCRETE PAVEMENT
- PROPOSED FULL STRENGTH AC PAVEMENT STRUCTURAL SECTION
- PROPOSED AC SHOULDER PAVEMENT STRUCTURAL SECTION
- PROPOSED PCCP PAVEMENT STRUCTURAL SECTION
- P121 PAVEMENT ELEVATION POINT, FINISHED GRADE MEETS EXISTING GRADE
- P120 PAVEMENT ELEVATION POINT AT FINISHED GRADE

D4 LEGEND

NOT TO SCALE

BID ALTERNATE 2			
PT NO.	NORTHING	EASTING	ELEV.
500	882664.31	561768.13	957.28
501	882678.60	561750.06	957.04
502	882690.70	561734.77	956.83
503	882702.80	561719.47	956.62
504	882714.90	561704.18	956.42
505	882726.99	561688.88	956.21
506	882739.09	561673.59	956.00
507	882751.19	561658.30	955.87
508	882763.29	561643.00	955.73
509	882775.38	561627.71	955.60
510	882787.48	561612.42	955.61
511	882799.58	561597.12	955.62
512	882811.68	561581.83	955.63
513	882823.38	561566.22	955.64
514	882679.60	561780.24	957.45
515	882693.87	561762.19	957.21
516	882705.97	561746.89	957.00
517	882718.07	561731.60	956.79
518	882730.17	561716.30	956.58
519	882742.26	561701.01	956.37
520	882754.36	561685.72	956.17
521	882766.46	561670.42	956.03
522	882778.56	561655.13	955.90
523	882790.65	561639.84	955.76
524	882802.75	561624.54	955.77
525	882814.85	561609.25	955.78
526	882826.95	561593.95	955.79
527	882839.05	561578.66	955.80
528	882851.14	561563.37	955.81
529	882694.88	561792.34	957.62
530	882709.14	561774.31	957.38
531	882721.24	561759.02	957.17
532	882733.34	561743.72	956.96
533	882745.44	561728.43	956.75
534	882757.53	561713.14	956.54
535	882769.63	561697.84	956.33
536	882781.73	561682.55	956.19
537	882793.83	561667.26	956.06
538	882805.93	561651.96	955.92
539	882818.02	561636.67	955.91

BID ALTERNATE 2			
PT NO.	NORTHING	EASTING	ELEV.
540	882830.12	561621.38	955.92
541	882842.22	561606.08	955.93
542	882854.32	561590.79	955.94
543	882866.41	561575.49	955.95
544	882878.50	561560.21	955.96
545	882710.17	561804.45	957.79
546	882724.42	561786.44	957.55
547	882736.51	561771.15	957.34
548	882748.61	561755.85	957.13
549	882760.71	561740.56	956.92
550	882772.81	561725.26	956.70
551	882784.90	561709.97	956.49
552	882797.00	561694.68	956.35
553	882809.10	561679.38	956.22
554	882821.20	561664.09	956.08
555	882833.29	561648.80	956.07
556	882845.39	561633.50	956.06
557	882857.49	561618.21	956.07
558	882869.59	561602.91	956.08
559	882881.68	561587.62	956.09
560	882893.78	561572.33	956.10
561	882901.31	561566.68	956.13
562	882725.46	561816.55	957.96
563	882739.69	561798.57	957.72
564	882751.78	561783.27	957.51
565	882763.88	561767.98	957.29
566	882775.98	561752.68	957.08
567	882788.08	561737.39	956.87
568	882800.17	561722.10	956.65
569	882812.27	561706.80	956.52
570	882824.37	561691.51	956.38
571	882836.47	561676.22	956.24
572	882848.56	561660.92	956.23
573	882860.66	561645.63	956.22
574	882872.76	561630.33	956.21
575	882884.86	561615.04	956.22
576	882896.96	561599.75	956.23
577	882909.05	561584.45	956.24
578	882912.62	561581.73	956.25
583	882740.75	561828.66	958.13

BID ALTERNATE 2			
PT NO.	NORTHING	EASTING	ELEV.
584	882754.96	561810.69	957.88
585	882767.06	561795.39	957.67
586	882779.16	561780.10	957.46
587	882791.25	561764.81	957.24
588	882803.35	561749.51	957.03
589	882815.45	561734.22	956.82
590	882827.55	561718.93	956.68
591	882839.64	561703.63	956.54
592	882851.74	561688.34	956.40
593	882863.84	561673.04	956.39
594	882875.94	561657.75	956.38
595	882888.03	561642.46	956.37
596	882900.13	561627.16	956.36
597	882912.23	561611.87	956.37
598	882924.34	561597.37	956.39
600	882756.03	561840.77	958.30
601	882770.23	561822.82	958.05
602	882782.33	561807.52	957.83
603	882794.42	561792.23	957.62
604	882806.52	561776.94	957.41
605	882818.62	561761.64	957.19
606	882830.72	561746.35	956.98
607	882842.81	561731.06	956.84
608	882854.91	561715.76	956.70
609	882867.01	561700.47	956.56
610	882879.11	561685.17	956.55
611	882891.20	561669.88	956.54
612	882903.30	561654.59	956.53
613	882915.40	561639.29	956.51
614	882927.50	561624.00	956.51
615	882936.45	561613.50	956.52
616	882771.32	561852.87	958.47
617	882785.50	561834.94	958.22
618	882797.60	561819.65	958.00
619	882809.69	561804.36	957.79
620	882821.79	561789.06	957.58
621	882833.89	561773.77	957.36
622	882845.99	561758.48	957.14
623	882858.08	561743.18	957.00
624	882870.18	561727.89	956.86

BID ALTERNATE 2			
PT NO.	NORTHING	EASTING	ELEV.
625	882882.28	561712.59	956.72
626	882894.38	561697.30	956.71
627	882906.48	561682.01	956.70
628	882918.57	561666.71	956.69
629	882930.67	561651.42	956.67
630	882942.77	561636.13	956.66
631	882948.55	561629.63	956.66
632	882556.08	561682.44	954.87
633	882579.63	561701.07	956.38
634	882538.35	561706.65	954.18
635	882772.30	561891.91	957.07
636	882790.93	561868.39	958.69
637	882913.65	561533.12	954.39
638	882890.00	561551.59	956.00
639	882971.75	561610.59	955.18
640	882988.92	561625.21	955.38
641	882966.92	561645.89	956.87
642	882949.76	561631.26	956.68

A3 BASE BID POINT TABLE

NOT TO SCALE

PER CITY OF PHOENIX CODE CHAPTER 2, SECTION 2-28. THESE PLANS ARE FOR OFFICIAL USE ONLY AND MAY NOT BE SHARED WITH OTHERS EXCEPT AS REQUIRED TO FULFILL THE OBLIGATIONS OF CONTRACTOR'S CONTRACT WITH THE CITY OF PHOENIX.

C&S COMPANIES

Registered Professional Engineer (Civil) CERTIFICATE NO. 33442 LANCE R. McINTOSH Date Signed 02-06-23 ARIZONA, U.S.A.

Expires: 3-31-23

NO.	REVISIONS / SUBMISSIONS	DATE

PER CITY OF PHOENIX CITY CODE CHAPTER 2, SECTION 2-28 THESE PLANS ARE FOR OFFICIAL USE ONLY AND MAY NOT BE SHARED WITH OTHERS EXCEPT AS REQUIRED TO FULFILL THE OBLIGATIONS OF YOUR CONTRACT WITH THE CITY OF PHOENIX.

PHX DVT CYR

CITY OF PHOENIX AVIATION DEPARTMENT

PHOENIX GOODYEAR AIRPORT

NEW APRON AND TAXIWAY CONNECTOR

AV41000077 FAA/ADOT

Designed by: NM
Drawn by: RB
Checked by: LM
Date: February 2023
Dwg scale: —

CIP NO.(S): AV41000077 FAA/ADOT

Sheet Overview Title

PAVING PLAN
BID ALT 2

Sheet Reference Number:

CP-103

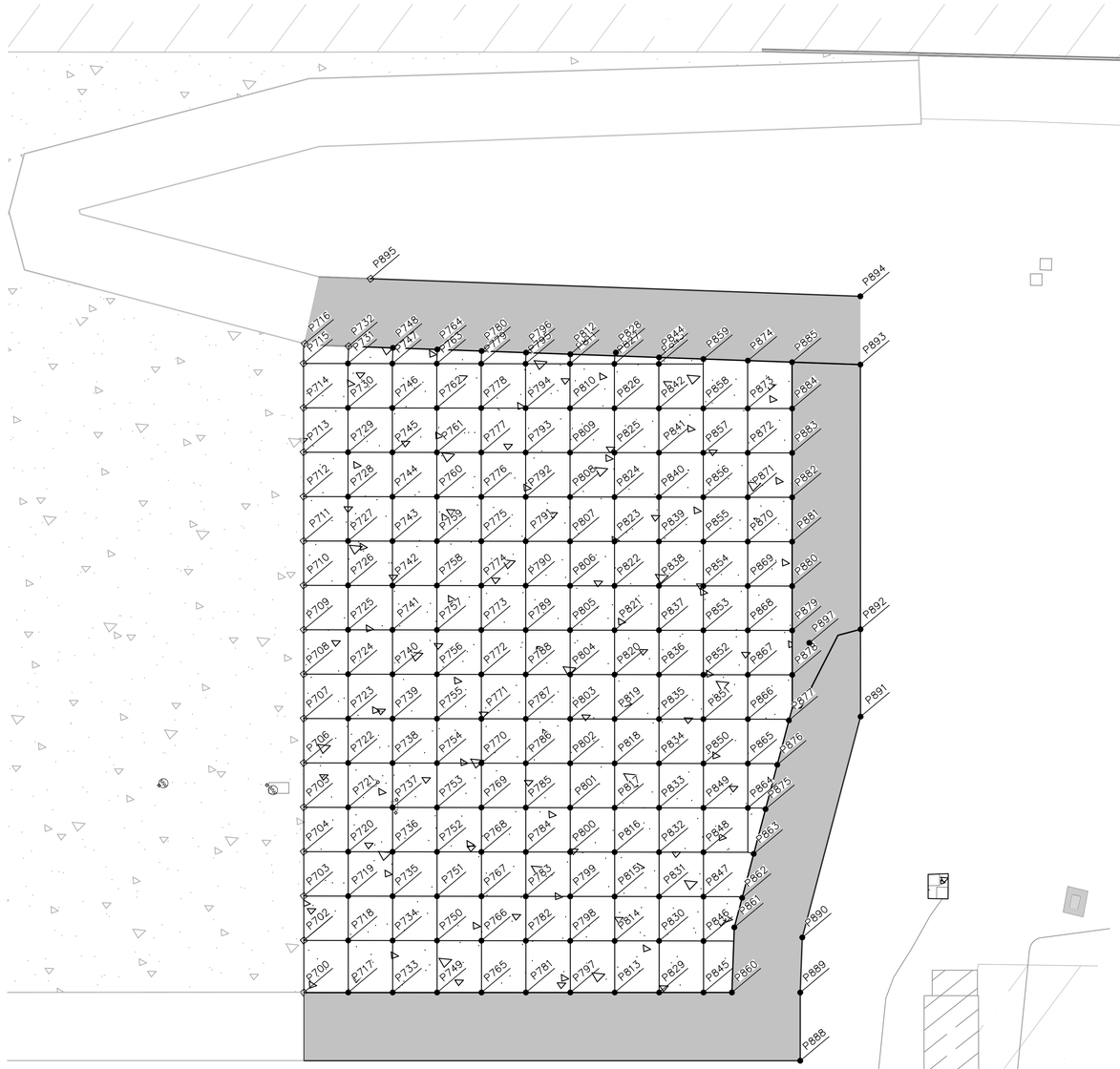

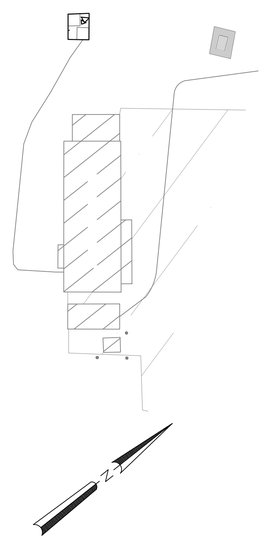

A1 BASE BID PAVING PLAN
SCALE: 1" = 30'

EXISTING ASPHALTIC CONCRETE PAVEMENT

EXISTING CONCRETE PAVEMENT

PROPOSED FULL STRENGTH AC PAVEMENT STRUCTURAL SECTION

PROPOSED AC SHOULDER PAVEMENT STRUCTURAL SECTION

PROPOSED PCCP PAVEMENT STRUCTURAL SECTION

P121 PAVEMENT ELEVATION POINT, FINISHED GRADE MEETS EXISTING GRADE

P120 PAVEMENT ELEVATION POINT AT FINISHED GRADE

D4 LEGEND
NOT TO SCALE

BID ALTERNATE 3			
PT NO.	NORTHING	EASTING	ELEV.
700	882771.32	561852.87	0.00
701	882785.50	561834.94	0.00
702	882785.50	561834.94	0.00
703	882797.60	561819.65	958.00
704	882809.69	561804.36	957.79
705	882821.79	561789.06	957.58
706	882833.89	561773.77	957.36
707	882845.99	561758.48	957.14
708	882858.08	561743.18	957.00
709	882870.18	561727.89	956.86
710	882882.28	561712.59	956.72
711	882894.38	561697.30	956.71
712	882906.48	561682.01	956.70
713	882918.57	561666.71	956.69
714	882930.67	561651.42	956.67
715	882942.77	561636.13	956.66
716	882948.54	561629.64	0.00
717	882786.61	561864.97	958.64
718	882800.77	561847.07	958.39
719	882812.87	561831.78	958.17
720	882824.96	561816.48	957.96
721	882837.06	561801.19	957.74
722	882849.16	561785.90	957.52
723	882861.26	561770.60	957.30
724	882873.36	561755.31	957.16
725	882885.45	561740.02	957.02
726	882897.55	561724.72	956.89
727	882909.65	561709.43	956.87
728	882921.75	561694.13	956.86
729	882933.84	561678.84	956.85
730	882945.94	561663.55	956.84
731	882958.04	561648.25	956.82
732	882962.94	561642.49	956.83
733	882801.89	561877.09	958.81
734	882816.04	561859.20	958.56
735	882828.14	561843.90	958.34
736	882840.24	561828.61	958.12
737	882852.33	561813.32	957.90
738	882864.43	561798.02	957.68
739	882876.53	561782.73	957.47
740	882888.63	561767.44	957.32
741	882900.72	561752.14	957.18
742	882912.82	561736.85	957.05
743	882924.92	561721.55	957.03
744	882937.02	561706.26	957.02
745	882949.11	561690.97	957.01
746	882961.21	561675.67	957.00

BID ALTERNATE 3			
PT NO.	NORTHING	EASTING	ELEV.
747	882973.31	561660.38	956.99
748	882977.78	561655.13	957.00
749	882817.18	561889.18	958.98
750	882831.31	561871.32	958.72
751	882843.41	561856.03	958.51
752	882855.51	561840.74	958.29
753	882867.60	561825.44	958.07
754	882879.70	561810.15	957.85
755	882891.80	561794.86	957.63
756	882903.90	561779.56	957.49
757	882915.99	561764.27	957.35
758	882928.09	561748.97	957.21
759	882940.19	561733.68	957.19
760	882952.29	561718.39	957.18
761	882964.39	561703.09	957.17
762	882976.48	561687.80	957.16
763	882988.58	561672.51	957.16
764	882992.62	561667.77	957.17
765	882832.47	561901.29	959.15
766	882846.58	561883.45	958.89
767	882858.68	561868.16	958.67
768	882870.78	561852.86	958.45
769	882882.88	561837.57	958.23
770	882894.97	561822.28	958.01
771	882907.07	561806.98	957.79
772	882919.17	561791.69	957.65
773	882931.27	561776.39	957.51
774	882943.36	561761.10	957.37
775	882955.46	561745.81	957.36
776	882967.56	561730.51	957.34
777	882979.66	561715.22	957.33
778	882991.75	561699.93	957.33
779	883003.85	561684.63	957.33
780	883007.45	561680.41	957.34
781	882847.76	561913.39	959.32
782	882861.85	561895.58	959.06
783	882873.95	561880.28	958.84
784	882886.05	561864.99	958.62
785	882898.15	561849.70	958.40
786	882910.24	561834.40	958.18
787	882922.34	561819.11	957.95
788	882934.44	561803.81	957.81
789	882946.54	561788.52	957.67
790	882958.63	561773.23	957.53
791	882970.73	561757.93	957.52
792	882982.83	561742.64	957.50
793	882994.93	561727.35	957.50
794	883007.02	561712.05	957.50
795	883019.12	561696.76	957.50
796	883022.29	561693.04	957.51

BID ALTERNATE 3			
PT NO.	NORTHING	EASTING	ELEV.
797	882863.04	561925.51	959.49
798	882877.12	561907.70	959.23
799	882889.22	561892.41	959.01
800	882901.32	561877.12	958.79
801	882913.42	561861.82	958.58
802	882925.51	561846.53	958.35
803	882937.61	561831.24	958.11
804	882949.71	561815.94	957.97
805	882961.81	561800.65	957.83
806	882973.91	561785.35	957.69
807	882986.00	561770.06	957.68
808	882998.10	561754.77	957.67
809	883010.20	561739.47	957.67
810	883022.30	561724.18	957.67
811	883034.39	561708.89	957.67
812	883037.13	561705.68	957.68
813	882878.32	561937.62	959.66
814	882892.39	561919.83	959.40
815	882904.49	561904.54	959.18
816	882916.59	561889.24	958.97
817	882928.69	561873.95	958.75
818	882940.79	561858.66	958.51
819	882952.88	561843.36	958.28
820	882964.98	561828.07	958.13
821	882977.08	561812.77	957.99
822	882989.18	561797.48	957.85
823	883001.27	561782.19	957.84
824	883013.37	561766.89	957.84
825	883025.47	561751.60	957.84
826	883037.57	561736.31	957.84
827	883049.66	561721.01	957.84
828	883053.23	561717.51	957.78
829	882893.61	561949.72	959.83
830	882907.67	561931.96	959.58
831	882919.76	561916.66	959.36
832	882931.86	561901.37	959.15
833	882943.96	561886.08	958.91
834	882956.06	561870.78	958.67
835	882968.15	561855.49	958.44
836	882980.25	561840.19	958.30
837	882992.35	561824.90	958.15
838	883004.45	561809.61	958.01
839	883016.54	561794.31	958.00
840	883028.64	561779.02	958.01
841	883040.74	561763.73	958.01
842	883052.84	561748.43	958.01
843	883064.94	561733.14	958.01
844	883066.80	561730.95	958.01
845	882908.91	561961.82	960.00
846	882922.94	561944.08	959.76

BID ALTERNATE 3			
PT NO.	NORTHING	EASTING	ELEV.
847	882935.03	561928.79	959.54
848	882947.13	561913.50	959.31
849	882959.23	561898.20	959.07
850	882971.33	561882.91	958.84
851	882983.42	561867.61	958.60
852	882995.52	561852.32	958.46
853	883007.62	561837.03	958.32
854	883019.72	561821.73	958.17
855	883031.82	561806.44	958.17
856	883043.91	561791.15	958.18
857	883056.01	561775.85	958.18
858	883068.11	561760.56	958.18
859	883081.63	561743.59	958.18
860	882918.69	561969.56	960.10
861	882937.26	561947.79	959.82
862	882948.00	561939.73	959.68
863	882963.99	561927.74	959.48
864	882974.50	561910.33	959.22
865	882986.60	561895.03	958.98
866	882998.70	561879.74	958.74
867	883010.79	561864.45	958.53
868	883022.89	561849.15	958.39
869	883034.99	561833.86	958.33
870	883047.09	561818.57	958.34
871	883059.18	561803.27	958.35
872	883071.28	561787.98	958.35
873	883083.38	561772.69	958.35
874	883096.48	561756.24	958.35
875	882980.26	561915.55	959.28
876	882996.38	561903.45	959.08
877	883012.51	561891.36	958.88
878	883026.06	561876.57	958.64
879	883038.16	561861.28	958.47
880	883050.26	561845.99	958.49
881	883062.36	561830.69	958.51
882	883074.45	561815.40	958.52
883	883086.55	561800.11	958.52
884	883098.65	561784.81	958.52
885	883111.28	561768.84	958.52
888	882923.58	562011.70	957.86
889	882942.19	561988.20	958.60
890	882957.92	561969.79	958.52
891	883038.19	561909.60	958.50
892	883061.99	561879.52	958.70
893	883134.14	561788.31	958.78
894	883152.76	561764.76	957.27
895	882988.92	561625.21	955.38
897	883040.68	561870.23	958.53

A3 BASE BID POINT TABLE
NOT TO SCALE

PER CITY OF PHOENIX CODE CHAPTER 2, SECTION 2-28. THESE PLANS ARE FOR OFFICIAL USE ONLY AND MAY NOT BE SHARED WITH OTHERS EXCEPT AS REQUIRED TO FULFILL THE OBLIGATIONS OF CONTRACTOR'S CONTRACT WITH THE CITY OF PHOENIX.

C&S COMPANIES

Registered Professional Engineer (Civil) CERTIFICATE NO. 33442 LANCE R. McINTOSH Date Signed 02-06-23 ARIZONA, U.S.A.
Expires: 3-31-23

PER CITY OF PHOENIX CODE CHAPTER 2, SECTION 2-28. THESE PLANS ARE FOR OFFICIAL USE ONLY AND MAY NOT BE SHARED WITH OTHERS EXCEPT AS REQUIRED TO FULFILL THE OBLIGATIONS OF YOUR CONTRACT WITH THE CITY OF PHOENIX.

NO.	REVISIONS / SUBMISSIONS	DATE

PHX DWT CYR
CITY OF PHOENIX AVIATION DEPARTMENT
PHOENIX GOODYEAR AIRPORT
NEW APRON AND TAXIWAY CONNECTOR
AV41000077 FAA/ADOT

Designed by: NM
Drawn by: RB
Checked by: LM
Date: February 2023
Dwg scale: ---

CIP NO.(S): AV41000077 FAA/ADOT

Sheet Overview Title

PAVING PLAN
BID ALT 3

Sheet Reference Number:
CP-104

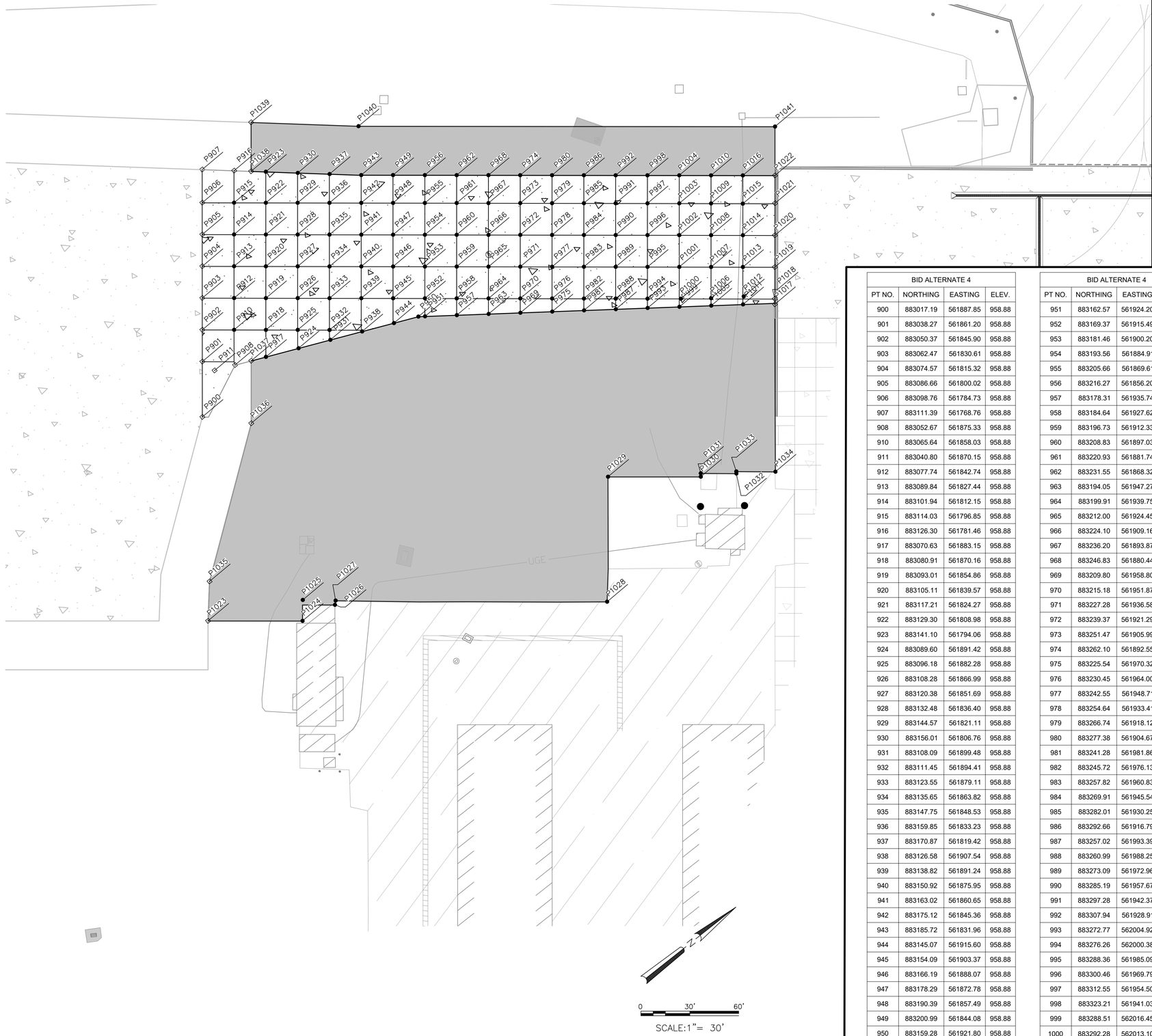

A1 BASE BID PAVING PLAN
SCALE: 1" = 30'

EXISTING ASPHALTIC CONCRETE PAVEMENT

EXISTING CONCRETE PAVEMENT

PROPOSED FULL STRENGTH AC PAVEMENT STRUCTURAL SECTION

PROPOSED AC SHOULDER PAVEMENT STRUCTURAL SECTION

PROPOSED PCCP PAVEMENT STRUCTURAL SECTION

P121 PAVEMENT ELEVATION POINT, FINISHED GRADE MEETS EXISTING GRADE

P120 PAVEMENT ELEVATION POINT AT FINISHED GRADE

D4 LEGEND
NOT TO SCALE

BID ALTERNATE 4			
PT NO.	NORTHING	EASTING	ELEV.
900	883017.19	561887.85	958.88
901	883038.27	561861.20	958.88
902	883050.37	561845.90	958.88
903	883062.47	561830.61	958.88
904	883074.57	561815.32	958.88
905	883086.66	561800.02	958.88
906	883098.76	561784.73	958.88
907	883111.39	561768.76	958.88
908	883052.67	561875.33	958.88
910	883065.64	561858.03	958.88
911	883040.80	561870.15	958.88
912	883077.74	561842.74	958.88
913	883089.84	561827.44	958.88
914	883101.94	561812.15	958.88
915	883114.03	561796.85	958.88
916	883126.30	561781.46	958.88
917	883070.63	561883.15	958.88
918	883080.91	561870.16	958.88
919	883093.01	561854.86	958.88
920	883105.11	561839.57	958.88
921	883117.21	561824.27	958.88
922	883129.30	561808.98	958.88
923	883141.10	561794.06	958.88
924	883089.60	561891.42	958.88
925	883096.18	561882.28	958.88
926	883108.28	561866.99	958.88
927	883120.38	561851.69	958.88
928	883132.48	561836.40	958.88
929	883144.57	561821.11	958.88
930	883156.01	561806.76	958.88
931	883108.09	561899.48	958.88
932	883111.45	561894.41	958.88
933	883123.55	561879.11	958.88
934	883135.65	561863.82	958.88
935	883147.75	561848.53	958.88
936	883159.85	561833.23	958.88
937	883170.87	561819.42	958.88
938	883126.58	561907.54	958.88
939	883138.82	561891.24	958.88
940	883150.92	561875.95	958.88
941	883163.02	561860.65	958.88
942	883175.12	561845.36	958.88
943	883185.72	561831.96	958.88
944	883145.07	561915.60	958.88
945	883154.09	561903.37	958.88
946	883166.19	561888.07	958.88
947	883178.29	561872.78	958.88
948	883190.39	561857.49	958.88
949	883200.99	561844.08	958.88
950	883159.28	561921.80	958.88

BID ALTERNATE 4			
PT NO.	NORTHING	EASTING	ELEV.
951	883162.57	561924.20	958.88
952	883169.37	561915.49	958.88
953	883181.46	561900.20	958.88
954	883193.56	561884.91	958.88
955	883205.66	561869.61	958.88
956	883216.27	561856.20	958.88
957	883178.31	561935.74	958.88
958	883184.64	561927.62	958.88
959	883196.73	561912.33	958.88
960	883208.83	561897.03	958.88
961	883220.93	561881.74	958.88
962	883231.55	561868.32	958.88
963	883194.05	561947.27	958.88
964	883199.91	561939.75	958.88
965	883212.00	561924.45	958.88
966	883224.10	561909.16	958.88
967	883236.20	561893.87	958.88
968	883246.83	561880.44	958.88
969	883209.80	561958.80	958.88
970	883215.18	561951.87	958.88
971	883227.28	561936.58	958.88
972	883239.37	561921.29	958.88
973	883251.47	561905.99	958.88
974	883262.10	561892.55	958.88
975	883225.54	561970.32	958.88
976	883230.45	561964.00	958.88
977	883242.55	561948.71	958.88
978	883254.64	561933.41	958.88
979	883266.74	561918.12	958.88
980	883277.38	561904.67	958.88
981	883241.28	561981.86	958.88
982	883245.72	561976.13	958.88
983	883257.82	561960.83	958.88
984	883269.91	561945.54	958.88
985	883282.01	561930.25	958.88
986	883292.66	561916.79	958.88
987	883257.02	561993.39	958.88
988	883260.99	561988.25	958.88
989	883273.09	561972.96	958.88
990	883285.19	561957.67	958.88
991	883297.28	561942.37	958.88
992	883307.94	561928.91	958.88
993	883272.77	562004.92	958.88
994	883276.26	562000.38	958.88
995	883288.36	561985.09	958.88
996	883300.46	561969.79	958.88
997	883312.55	561954.50	958.88
998	883323.21	561941.03	958.88
999	883288.51	562016.45	958.88
1000	883292.28	562013.10	1,917.76

BID ALTERNATE 4			
PT NO.	NORTHING	EASTING	ELEV.
1001	883303.63	561997.21	958.88
1002	883315.73	561981.92	958.88
1003	883327.82	561966.63	958.88
1004	883338.49	561953.15	958.88
1005	883304.25	562027.98	958.88
1006	883307.00	562024.39	1,917.76
1007	883318.90	562009.34	958.88
1008	883331.00	561994.05	958.88
1009	883343.10	561978.75	958.88
1010	883353.77	561965.27	958.88
1011	883319.99	562039.51	958.88
1012	883323.38	562035.92	1,917.76
1013	883334.17	562021.47	958.88
1014	883346.27	562006.17	958.88
1015	883358.25	561990.96	0.00
1016	883369.04	561977.38	958.88
1017	883335.32	562051.53	958.88
1018	883337.38	562048.92	958.88
1019	883349.53	562033.66	958.88
1020	883361.66	562018.40	958.88
1021	883373.91	562003.05	1,917.76
1022	883384.48	561989.63	958.88
1023	882942.31	561988.12	958.88
1024	882987.69	562024.11	958.88
1025	882995.78	562014.10	958.88
1026	883009.38	562028.70	958.88
1027	883011.31	562026.92	958.88
1028	883141.42	562130.79	958.88
1029	883189.47	562071.03	958.88
1030	883234.05	562106.32	958.88
1031	883235.37	562104.66	958.88
1032	883252.38	562118.32	958.88
1033	883253.14	562117.32	958.88
1034	883271.84	562132.32	958.88
1035	882958.03	561969.71	958.88
1036	883038.30	561909.52	958.88
1037	883062.10	561879.43	958.88
1038	883134.25	561788.22	958.88
1039	883152.87	561764.68	958.88
1040	883203.03	561807.40	958.88
1041	883403.12	561966.12	958.88

A3 BASE BID POINT TABLE
NOT TO SCALE

PER CITY OF PHOENIX CODE CHAPTER 2, SECTION 2-28. THESE PLANS ARE FOR OFFICIAL USE ONLY AND MAY NOT BE SHARED WITH OTHERS EXCEPT AS REQUIRED TO FULFILL THE OBLIGATIONS OF CONTRACTOR'S CONTRACT WITH THE CITY OF PHOENIX.

C&S COMPANIES

Registered Professional Engineer (Civil) CERTIFICATE NO. 33442 LANCE R. McINTOSH Date Signed 02-06-23 ARIZONA, U.S.A.
Expires: 3-31-23

NO.	REVISIONS / SUBMISSIONS	DATE

PER CITY OF PHOENIX CODE CHAPTER 2, SECTION 2-28 THESE PLANS ARE FOR OFFICIAL USE ONLY AND MAY NOT BE SHARED WITH OTHERS EXCEPT AS REQUIRED TO FULFILL THE OBLIGATIONS OF YOUR CONTRACT WITH THE CITY OF PHOENIX

PHX DWT CYR
CITY OF PHOENIX AVIATION DEPARTMENT
PHOENIX GOODYEAR AIRPORT
NEW APRON AND TAXIWAY CONNECTOR
AV41000077 FAA/ADOT

Designed by: NM
Drawn by: RB
Checked by: LM
Date: February 2023
Dwg scale: ---
CIP NO.(S): AV41000077 FAA/ADOT

Sheet Overview Title
PAVING PLAN
BID ALT 4

Sheet Reference Number:
CP-105

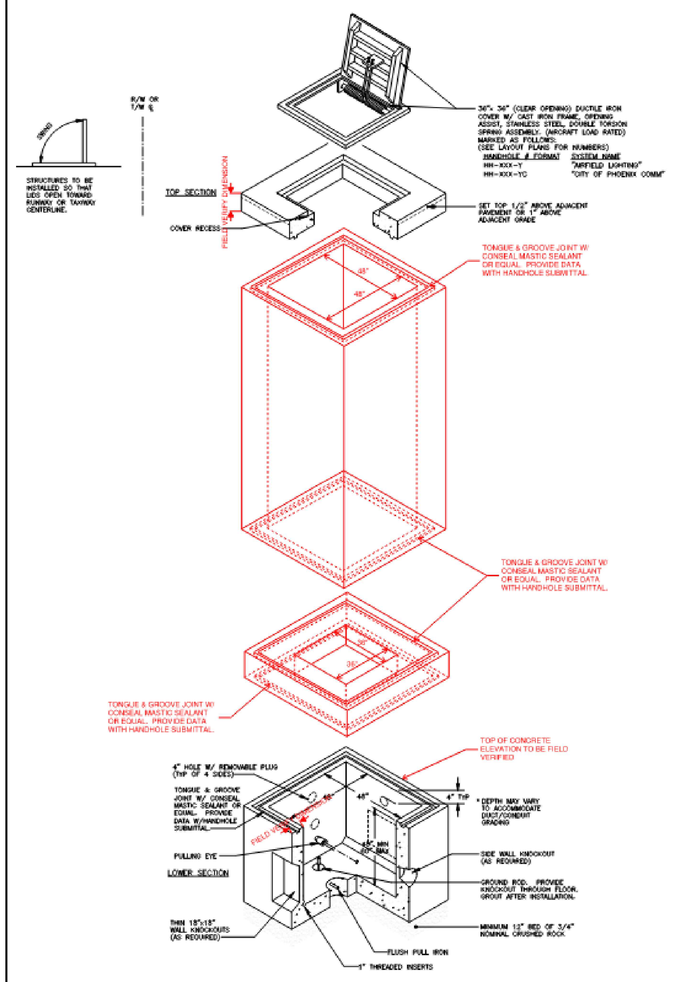

EXISTING PRECAST CONCRETE TOP AND DUCTILE IRON LID TO BE SALVAGED AND RELOCATED TO TOP OF NEW PRECAST CONCRETE RISER

NEW PRECAST CONCRETE VERTICAL EXTENSION AT EXISTING PRECAST CONCRETE HANDHOLE PER SPECIFICATION SECTION L-127. EXACT LENGTH TO BE DETERMINED BASED UPON FIELD VERIFIED ELEVATIONS AT EXISTING CONSTRUCTION AND COORDINATED WITH PROPOSED FINISHED GRADES. WALL THICKNESS OF NEW VERTICAL EXTENSION SHALL MATCH EXISTING PRECAST CONCRETE HANDHOLE.

NEW PRECAST CONCRETE STIFFENER AT TRANSITION BETWEEN TOP OF EXISTING PRECAST CONCRETE HANDHOLE AND BOTTOM OF NEW PRECAST CONCRETE VERTICAL EXTENSION

EXISTING PRECAST CONCRETE HANDHOLE TO REMAIN

A1 VAULT RISER DETAIL
NOT TO SCALE

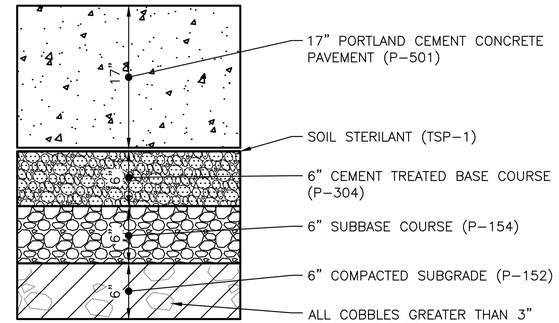

D3 PCCP STRUCTURAL SECTION
NOT TO SCALE

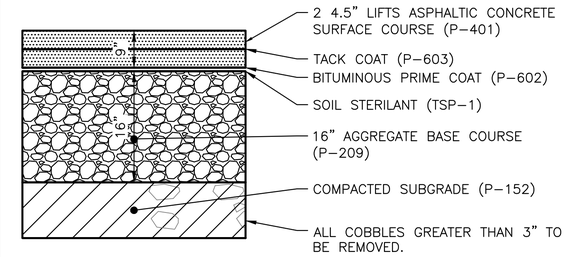

D4 AC PAVEMENT STRUCTURAL SECTION
NOT TO SCALE

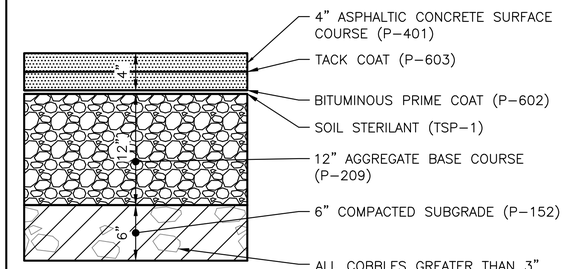

C3 AC PAVEMENT SHOULDER STRUCTURAL SECTION
NOT TO SCALE

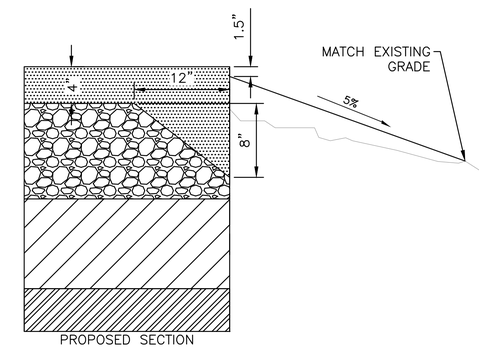

C4 MARICOPA PAVEMENT EDGE & SHOULDER GRADING DETAIL
NOT TO SCALE

B3 NOT USED
NOT TO SCALE

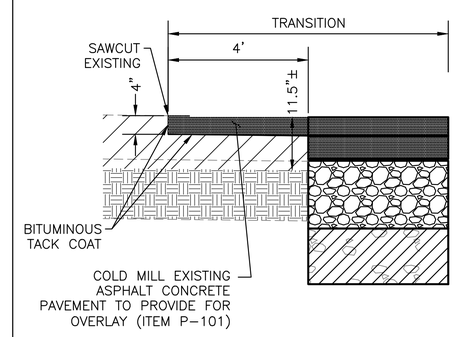

B4 PAVEMENT TRANSITION
NOT TO SCALE

A3 NOT USED
NOT TO SCALE

PER CITY OF PHOENIX CODE CHAPTER 2, SECTION 2-28. THESE PLANS ARE FOR OFFICIAL USE ONLY AND MAY NOT BE SHARED WITH OTHERS EXCEPT AS REQUIRED TO FULFILL THE OBLIGATIONS OF YOUR CONTRACT WITH THE CITY OF PHOENIX.

C&S COMPANIES

Registered Professional Engineer (Civil) CERTIFICATE NO. 33442 LANCE R. McINTOSH Date Signed 02-06-23 ARIZONA, U.S.A.
Expires: 3-31-23

NO.	REVISIONS / SUBMISSIONS	DATE

PER CITY OF PHOENIX CITY CODE CHAPTER 2, SECTION 2-28 THESE PLANS ARE FOR OFFICIAL USE ONLY AND MAY NOT BE SHARED WITH OTHERS EXCEPT AS REQUIRED TO FULFILL THE OBLIGATIONS OF YOUR CONTRACT WITH THE CITY OF PHOENIX

PHX DVT CITY OF PHOENIX AVIATION DEPARTMENT
PHOENIX GOODYEAR AIRPORT
NEW APRON AND TAXIWAY CONNECTOR
AV41000077 FAA/ADOT

Designed by: RB
Drawn by: RB
Checked by: LM
Date: February 2023
Dwg scale: —
CIP NO.(S): AV41000077 FAA/ADOT

Sheet Overview Title
PAVING AND JOINT DETAILS

Sheet Reference Number:
CP501

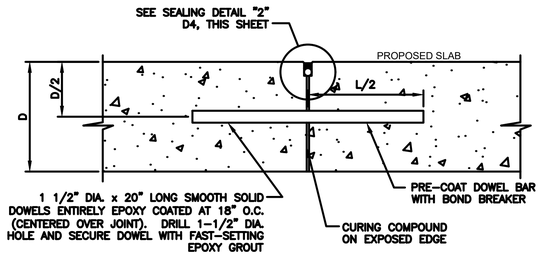

NOTES:

1. REMOVE PLASTIC EPOXY RETENTION RINGS AROUND DOWEL BARS PRIOR TO PLACEMENT OF ADJACENT SLAB

D1 TYPE D JOINT - CONSTRUCTION JOINT
NOT TO SCALE

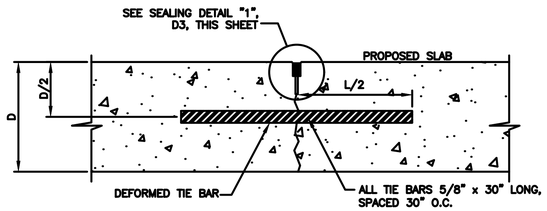

D2 TYPE F JOINT - DOWELED CONTRACTION JOINT
NOT TO SCALE

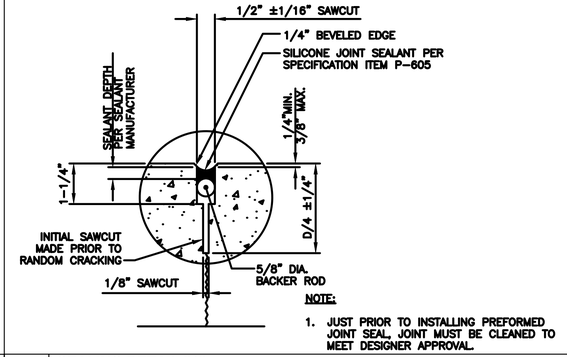

NOTE:

1. JUST PRIOR TO INSTALLING PREFORMED JOINT SEAL, JOINT MUST BE CLEANED TO MEET DESIGNER APPROVAL.

D3 SEALING DETAIL "1"
NOT TO SCALE

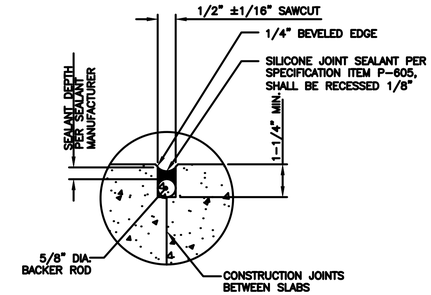

D4 SEALING DETAIL "2"
NOT TO SCALE

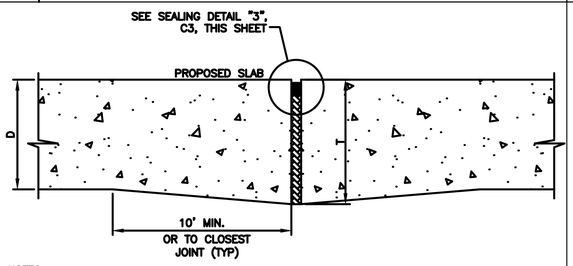

NOTES:

1. FOR TYPE B, THICKENED EDGE SLABS, THE P -209 SHALL BE CONSTRUCTED TO FULL DEPTHS. COST FOR MODIFYING THESE COURSES SHALL BE CONSIDERED INCIDENTAL TO ITEM P-501.
2. FOR TYPE B JOINT AT TRENCH DRAIN AND DRAINAGE STRUCTURES, SEE DETAIL C2/C-18
3. T = 1.25D

C1 TYPE B JOINT - THICKENED SLAB ISOLATION JOINT
NOT TO SCALE

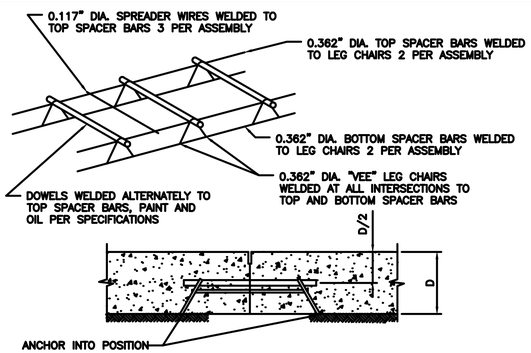

C2 TYPICAL DOWEL AND TIE BAR BASKET
NOT TO SCALE

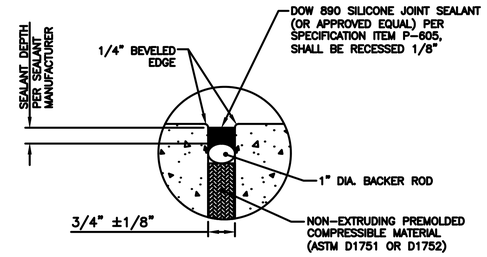

C3 SEALING DETAIL "3"
NOT TO SCALE

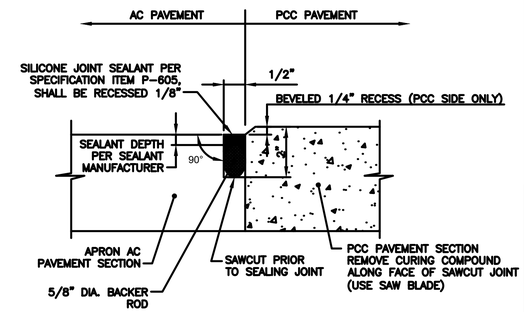

C4 JOINT SEALING DETAIL "4"
NOT TO SCALE

1. A TRANSVERSE CONSTRUCTION JOINT SHALL BE INSTALLED AT A PLANNED JOINT WHEN PAVING OPERATIONS ARE INTERRUPTED FOR MORE THAN A HALF AN HOUR (30 MINUTES). IF AN INTERRUPTION OCCURS BETWEEN PLANNED JOINTS, THE FRESH CONCRETE SHALL BE REMOVED BACK TO THE PREVIOUSLY INSTALLED JOINT. NO JOINTS WILL BE ALLOWED BETWEEN THE JOINTS SHOWN WITHIN THESE PLANS.
2. EDGES OF CONCRETE SLABS SHALL BE COVERED WITH AN APPROVED CURING MATERIAL AT THE SAME TIME AS THE SURFACE IS CURED. AT FORMED LOCATIONS, SLAB SIDES SHALL BE CURED WHEN FORMS ARE REMOVED.
3. THE PRE-FORMED JOINT SEAL IN TRANSVERSE (CONTRACTION) JOINTS SHALL BE INSTALLED IN ONE CONTINUOS PIECE ACROSS THE APRON. THE LONGITUDINAL (CONSTRUCTION) JOINT SEALANT SHALL BE INTERRUPTED AT EVERY TRANSVERSE JOINT THROUGHOUT ITS LENGTH. SEALANT RESERVOIR SHAPE FACTOR (W/D) SHALL BE PER THE SEALANT MANUFACTURER'S INSTRUCTION RECOMMENDATIONS. ALL JOINT SEALANT RESERVOIRS SHOWN WITHIN THESE PLANS SHALL BE VERIFIED BY THE SEALANT MANUFACTURER PRIOR TO CONSTRUCTION (REFERENCE SPECIFICATIONS P-604 AND P-605 FOR MORE INFORMATION).
4. THE COST OF MODIFYING THE UNDERLYING PAVEMENT COURSES TO ACCOMMODATE THE CONCRETE PAVEMENT THICKENED EDGE IS INCIDENTAL TO ITEM P-501. NO SEPARATE PAYMENT WILL BE MADE FOR NECESSARY MODIFICATIONS.

B1 PAVING NOTES
NOT TO SCALE

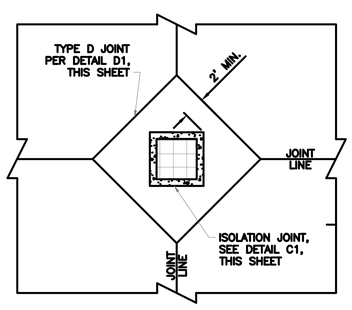

B2 BOXOUT JOINT LAYOUT FOR UTILITY LIDS IN CONCRETE
NOT TO SCALE

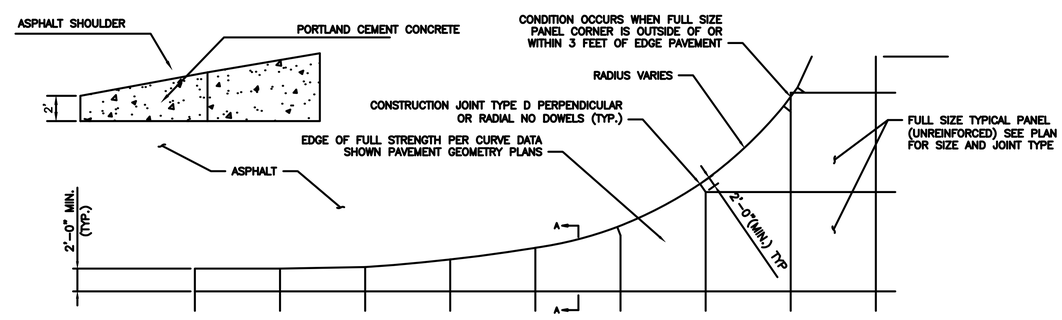

B3 PLAN VIEW - TYPICAL IRREGULAR PAVEMENT SLAB DETAIL
NOT TO SCALE

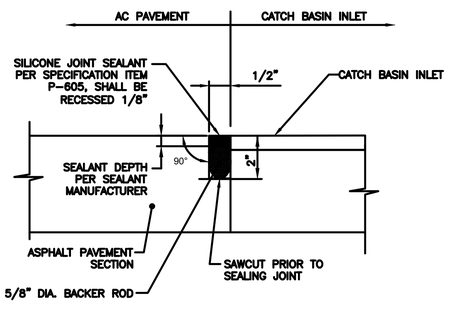

A1 AC PAVEMENT AND CATCH BASIN JOINT SEALING DETAIL
NOT TO SCALE

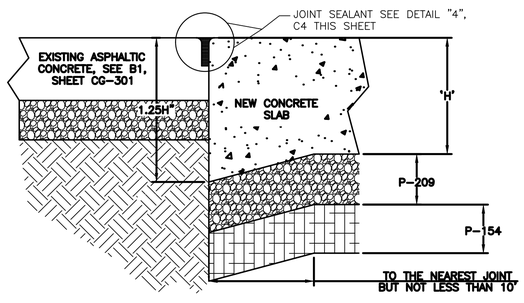

A2 TYPE E JOINT- THICKENED PCCP/AC JOINT SEAL
NOT TO SCALE

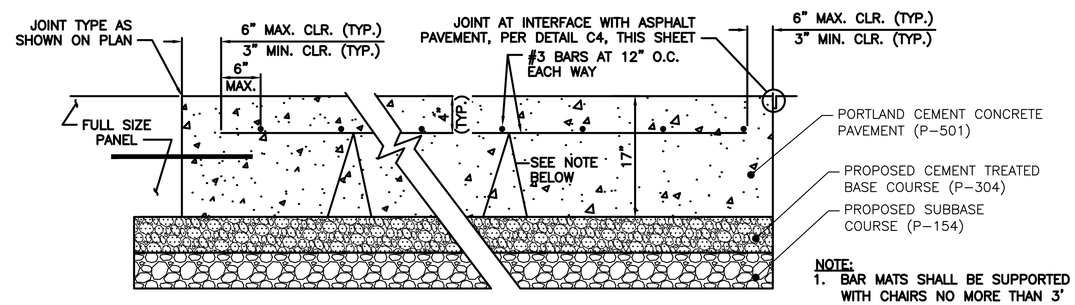

NOTE:

1. BAR MATS SHALL BE SUPPORTED WITH CHAIRS NO MORE THAN 3' APART.

A3 IRREGULAR REINFORCED PAVEMENT SLAB DETAIL
SCALE: NOT TO SCALE

PER CITY OF PHOENIX CODE CHAPTER 2, SECTION 2-28. THESE PLANS ARE FOR OFFICIAL USE ONLY AND MAY NOT BE SHARED WITH OTHERS EXCEPT AS REQUIRED TO FULFILL THE OBLIGATIONS OF CONTRACTOR'S CONTRACT WITH THE CITY OF PHOENIX.

C&S COMPANIES

Registered Professional Engineer (Civil) CERTIFICATE NO. 33442 LANCE R. McINTOSH Date Signed 02-08-23 ARIZONA, U.S.A.
Expires: 3-31-23

NO.	REVISIONS / SUBMISSIONS	DATE

PER CITY OF PHOENIX CODE CHAPTER 2, SECTION 2-28 THESE PLANS ARE FOR OFFICIAL USE ONLY AND MAY NOT BE SHARED WITH OTHERS EXCEPT AS REQUIRED TO FULFILL THE OBLIGATIONS OF YOUR CONTRACT WITH THE CITY OF PHOENIX.

PSX DVT CITY OF PHOENIX AVIATION DEPARTMENT
PHOENIX GOODYEAR AIRPORT
NEW APRON AND TAXIWAY CONNECTOR
AV41000077 FAA/ADOT

Designed by: RB
Drawn by: RB
Checked by: LM
Date: February 2023
Dwg scale: —
CIP NO.(S): AV41000077 FAA/ADOT

Sheet Overview Title
PAVING AND JOINT DETAILS

Sheet Reference Number:
CP502

D2 GENERAL NOTES
NOT TO SCALE

D3 LEGEND
NOT TO SCALE

- PROPOSED GRADING LIMITS
- PROPOSED MAJOR/MINOR CONTOUR
- EXISTING MAJOR/MINOR CONTOUR
- PROPOSED STORM DRAIN PIPE
- PROPOSED AIRCRAFT RATED TRENCH DRAIN
- PROPOSED AIRCRAFT RATED CATCH BASIN
- PROPOSED FLARED END SECTION
- PROPOSED RIPRAP

D4 CONSTRUCTION NOTES
NOT TO SCALE

1. AIRCRAFT RATED CATCH BASIN PER DETAIL A1, SHEET CU502. (BASE BID). ITEM D-751.
2. 24" DIAMETER REINFORCED CONCRETE PIPE PER DETAIL B2, SHEET CU502. (BASE BID). ITEM D-701.
3. 12" AIRCRAFT RATED TRENCH DRAIN PER DETAILS A3, A4, B3, C3, AND D3 ON SHEET CU501. (BASE BID). ITEM D-750.
4. END SECTION – REINFORCED CONCRETE PIPE PER MAG STD. DETAIL 545. (BASE BID). INCIDENTAL TO ITEM D-701.
5. INSTALL RIPRAP (D60=6", DEPTH=24"). (BASE BID). ITEM TSP-4.

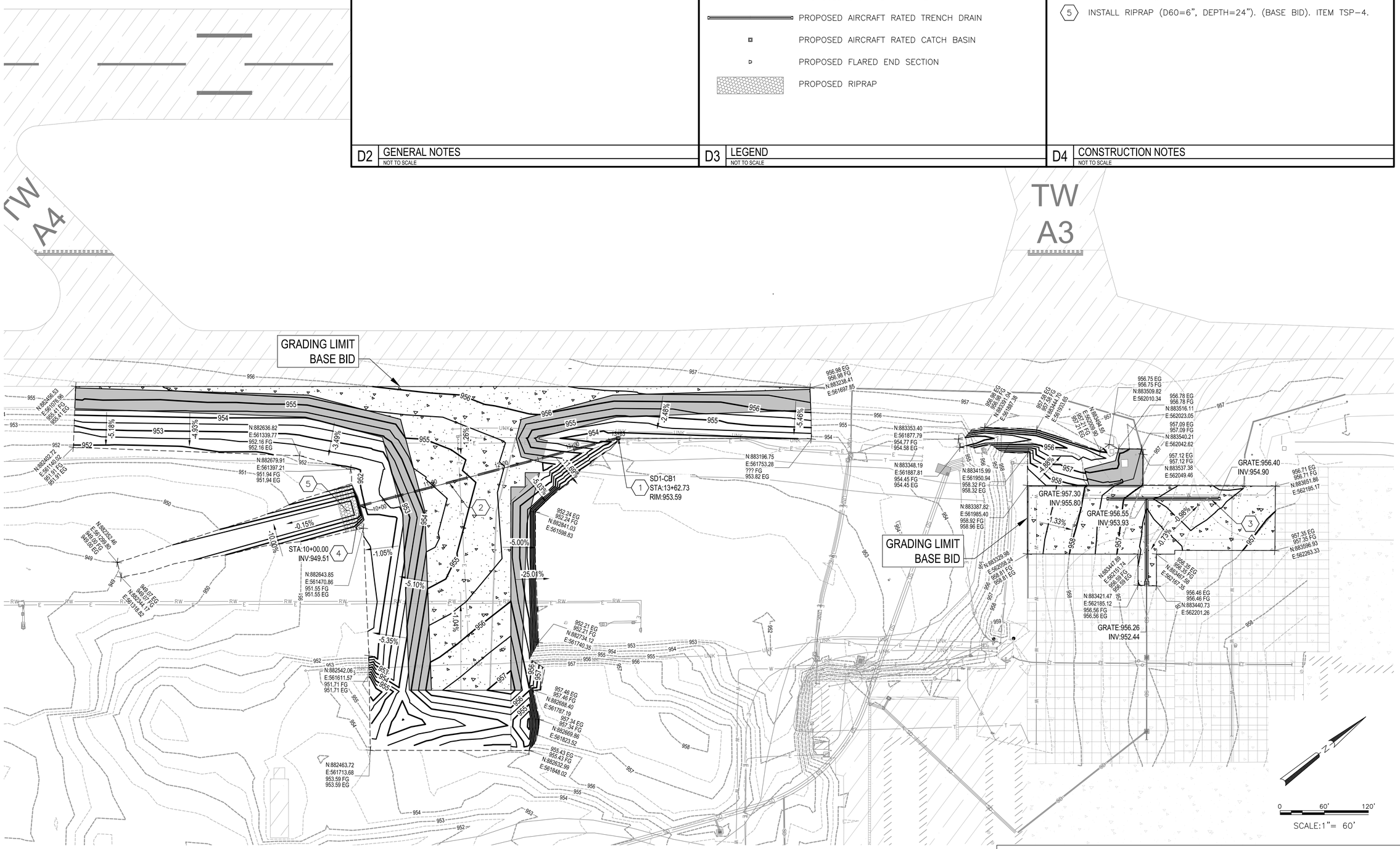

PER CITY OF PHOENIX CODE CHAPTER 2, SECTION 2-28. THESE PLANS ARE FOR OFFICIAL USE ONLY AND MAY NOT BE SHARED WITH OTHERS EXCEPT AS REQUIRED TO FULFILL THE OBLIGATIONS OF CONTRACTOR'S CONTRACT WITH THE CITY OF PHOENIX.

A1 GRADING AND DRAINAGE PLAN
SCALE: 1" = 60'

C&S COMPANIES

Registered Professional Engineer (Civil) CERTIFICATE NO. 33442 LANCE R. McINTOSH Date Signed 02-28-23 ARIZONA, U.S.A.

Expires: 3-31-23

NO.	REVISIONS / SUBMISSIONS	DATE

PER CITY OF PHOENIX CITY CODE CHAPTER 2, SECTION 2-28 THESE PLANS ARE FOR OFFICIAL USE ONLY AND MAY NOT BE SHARED WITH OTHERS EXCEPT AS REQUIRED TO FULFILL THE OBLIGATIONS OF YOUR CONTRACT WITH THE CITY OF PHOENIX.

PHX DVT CYR
CITY OF PHOENIX AVIATION DEPARTMENT
PHOENIX GOODYEAR AIRPORT
NEW APRON AND TAXIWAY CONNECTOR
AV41000077 FAA/ADOT

Designed by: RB
Drawn by: RB
Checked by: LM
Date: February 2023
Dwg scale: —
CIP NO.(S): AV41000077 FAA/ADOT

Sheet Overview Title
GRADING AND DRAINAGE PLAN
BASE BID

Sheet Reference Number:
CU101

D2 GENERAL NOTES	D3 LEGEND	D4 CONSTRUCTION NOTES
NOT TO SCALE	NOT TO SCALE	NOT TO SCALE

- PROPOSED GRADING LIMITS
- PROPOSED MAJOR/MINOR CONTOUR
- EXISTING MAJOR/MINOR CONTOUR

1. PROTECT EXISTING CATCH BASIN IN PLACE
2. PROTECT EXISTING STRUCTURE IN PLACE

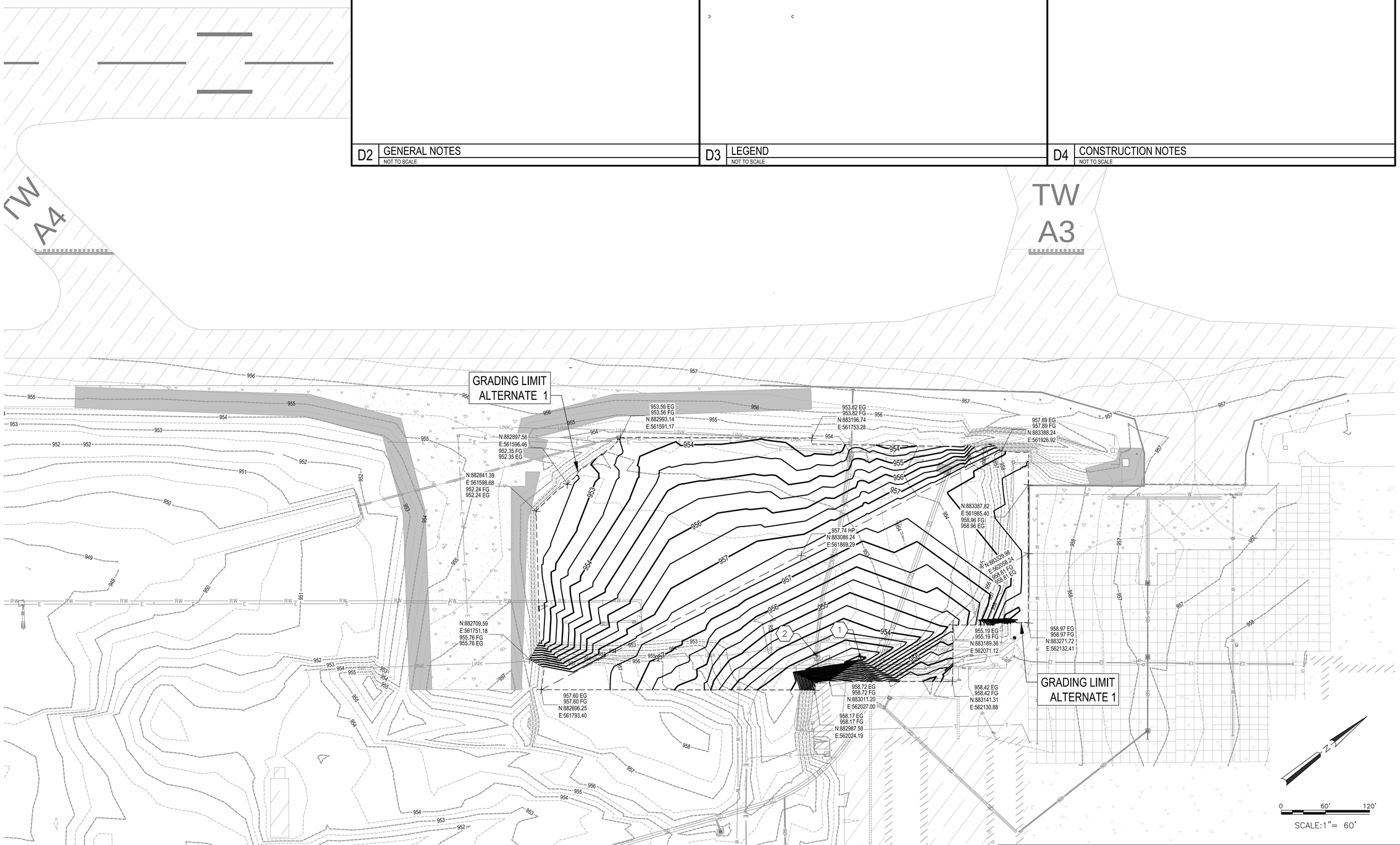

A1 GRADING AND DRAINAGE PLAN
SCALE: 1" = 60'

PER CITY OF PHOENIX CODE CHAPTER 2, SECTION 2-28. THESE PLANS ARE FOR OFFICIAL USE ONLY AND MAY NOT BE SHARED WITH OTHERS EXCEPT AS REQUIRED TO FULFILL THE OBLIGATIONS OF CONTRACTOR'S CONTRACT WITH THE CITY OF PHOENIX.

C&S COMPANIES

Registered Professional Engineer (Civil) CERTIFICATE NO. 33442 LANCE R. McINTOSH Date Signed 02-06-23 ARIZONA, U.S.A.

Expires: 3-31-23

NO.	REVISIONS / SUBMISSIONS	DATE

PER CITY OF PHOENIX CODE CHAPTER 2, SECTION 2-28 THESE PLANS ARE FOR OFFICIAL USE ONLY AND MAY NOT BE SHARED WITH OTHERS EXCEPT AS REQUIRED TO FULFILL THE OBLIGATIONS OF YOUR CONTRACT WITH THE CITY OF PHOENIX.

PHX DVT CYR

CITY OF PHOENIX AVIATION DEPARTMENT

PHOENIX GOODYEAR AIRPORT
NEW APRON AND TAXIWAY CONNECTOR

AV41000077 FAA/ADOT

Designed by: RB
Drawn by: RB
Checked by: LM
Date: February 2023
Dwg scale: ---

CIP NO.(S): AV41000077 FAA/ADOT

Sheet Overview Title

GRADING AND DRAINAGE PLAN
BID ALT 1

Sheet Reference Number:

CU102

D2 GENERAL NOTES
NOT TO SCALE

D3 LEGEND
NOT TO SCALE

- PROPOSED GRADING LIMITS
- PROPOSED MAJOR/MINOR CONTOUR
- EXISTING MAJOR/MINOR CONTOUR
- PROPOSED GRADED SWALE FLOW LINE

D4 CONSTRUCTION NOTES
NOT TO SCALE

1. AIRCRAFT RATED CATCH BASIN PER DETAIL A1, SHEET CU502. (BASE BID). ITEM D-751.

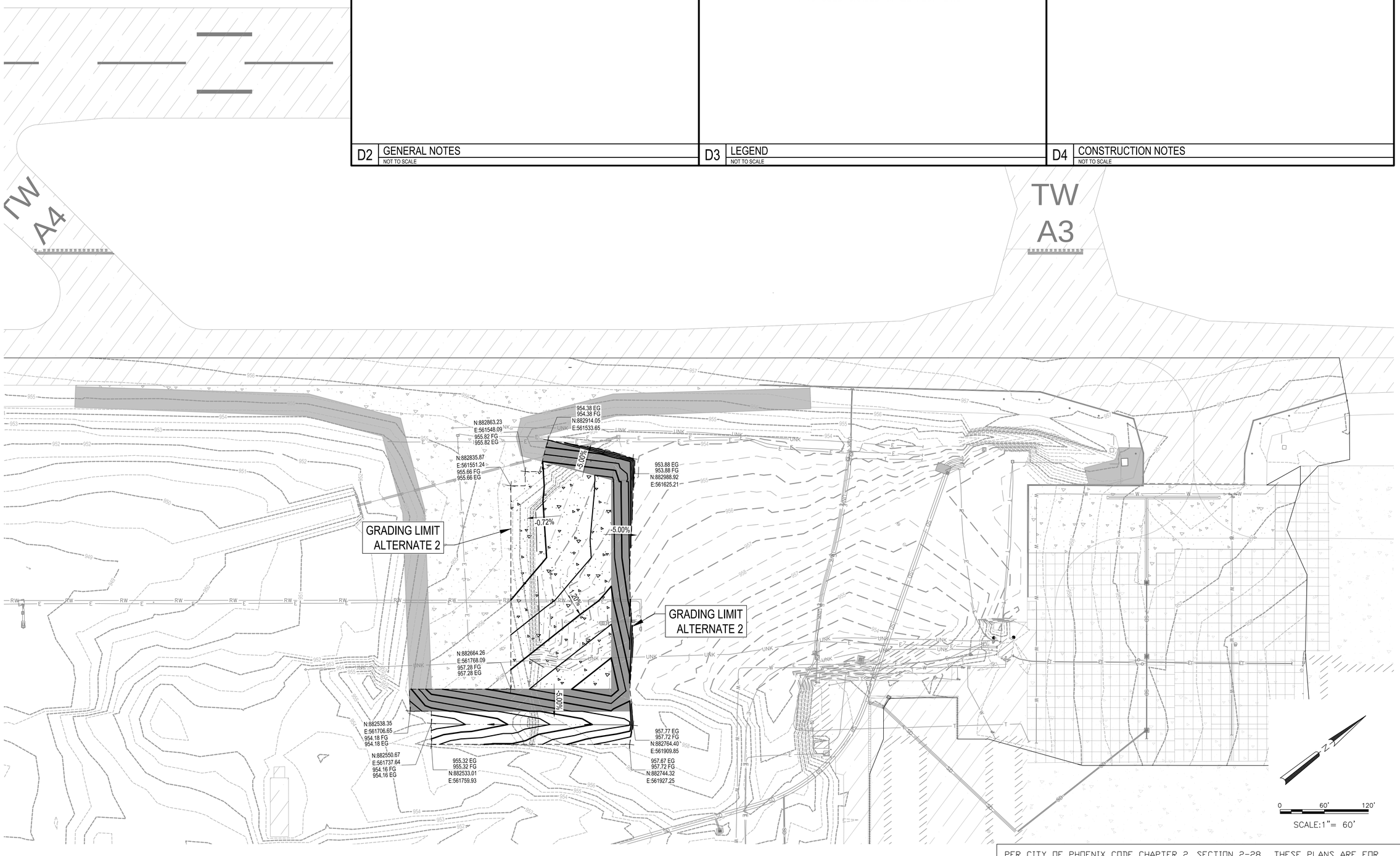

A1 GRADING AND DRAINAGE PLAN
SCALE: 1" = 60'

PER CITY OF PHOENIX CODE CHAPTER 2, SECTION 2-28. THESE PLANS ARE FOR OFFICIAL USE ONLY AND MAY NOT BE SHARED WITH OTHERS EXCEPT AS REQUIRED TO FULFILL THE OBLIGATIONS OF CONTRACTOR'S CONTRACT WITH THE CITY OF PHOENIX.

C&S COMPANIES

Registered Professional Engineer (Civil) CERTIFICATE NO. 33442 LANCE R. McINTOSH Date Signed 02-06-23 ARIZONA, U.S.A.

Expires: 3-31-23

PER CITY OF PHOENIX CITY CODE CHAPTER 2, SECTION 2-28 THESE PLANS ARE FOR OFFICIAL USE ONLY AND MAY NOT BE SHARED WITH OTHERS EXCEPT AS REQUIRED TO FULFILL THE OBLIGATIONS OF YOUR CONTRACT WITH THE CITY OF PHOENIX

NO.	REVISIONS / SUBMISSIONS	DATE

PHX DVT CYR

CITY OF PHOENIX AVIATION DEPARTMENT

PHOENIX GOODYEAR AIRPORT
NEW APRON AND TAXIWAY CONNECTOR

AV41000077 FAA/ADOT

Designed by: RB
Drawn by: RB
Checked by: LM
Date: February 2023
Dwg scale: ---

CIP NO.(S): AV41000077 FAA/ADOT

Sheet Overview Title

GRADING AND DRAINAGE PLAN
BID ALT 2

Sheet Reference Number:

CU103

D2 GENERAL NOTES
NOT TO SCALE

D3 LEGEND
NOT TO SCALE

- PROPOSED GRADING LIMITS
- PROPOSED MAJOR/MINOR CONTOUR
- EXISTING MAJOR/MINOR CONTOUR
- PROPOSED GRADED SWALE FLOW LINE

D4 CONSTRUCTION NOTES
NOT TO SCALE

1. PROTECT EXISTING CATCH BASIN IN PLACE
2. EXISTING UTILITY STRUCTURE TO BE ADJUSTED TO PROPOSED GRADE. SEE DETAIL A3/CU502

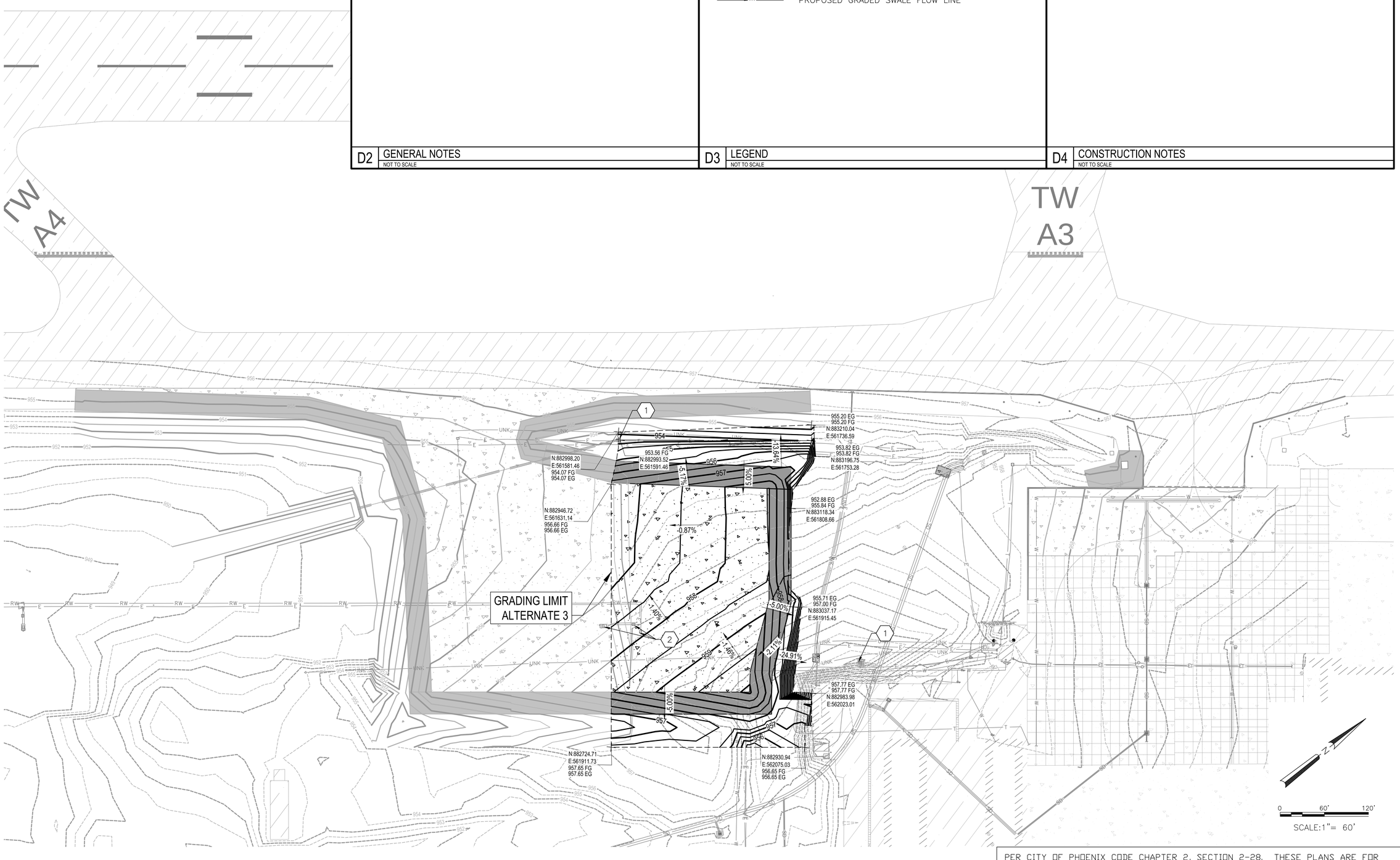

PER CITY OF PHOENIX CODE CHAPTER 2, SECTION 2-28. THESE PLANS ARE FOR OFFICIAL USE ONLY AND MAY NOT BE SHARED WITH OTHERS EXCEPT AS REQUIRED TO FULFILL THE OBLIGATIONS OF CONTRACTOR'S CONTRACT WITH THE CITY OF PHOENIX.

A1 GRADING AND DRAINAGE PLAN
SCALE: 1" = 60'

C&S COMPANIES

Registered Professional Engineer (Civil) CERTIFICATE NO. 33442 LANCE R. McINTOSH Date Signed 02-28-23 ARIZONA, U.S.A.

Expires: 3-31-23

NO.	REVISIONS / SUBMISSIONS	DATE

FOR CITY OF PHOENIX CITY CODE CHAPTER 2, SECTION 2-28 THESE PLANS ARE FOR OFFICIAL USE ONLY AND MAY NOT BE SHARED WITH OTHERS EXCEPT AS REQUIRED TO FULFILL THE OBLIGATIONS OF YOUR CONTRACT WITH THE CITY OF PHOENIX.

PHX DVT CYR

CITY OF PHOENIX AVIATION DEPARTMENT

PHOENIX GOODYEAR AIRPORT
NEW APRON AND TAXIWAY CONNECTOR

AV41000077 FAA/ADOT

Designed by: RB
Drawn by: RB
Checked by: LM
Date: February 2023
Dwg scale: ---

CIP NO.(S): AV41000077 FAA/ADOT

Sheet Overview Title

GRADING AND DRAINAGE PLAN
BID ALT 3

Sheet Reference Number:

CU104

D2 GENERAL NOTES
NOT TO SCALE

D3 LEGEND
NOT TO SCALE

- PROPOSED GRADING LIMITS
- PROPOSED MAJOR/MINOR CONTOUR
- EXISTING MAJOR/MINOR CONTOUR
- PROPOSED AIRCRAFT RATED CATCH BASIN
- PROPOSED GRADED SWALE FLOW LINE

D4 CONSTRUCTION NOTES
NOT TO SCALE

1. AIRCRAFT RATED CATCH BASIN PER DETAIL A1, SHEET CU502. (BASE BID). ITEM D-751.
2. EXISTING UTILITY STRUCTURE TO BE MODIFIED, ADJUST TO PROPOSED GRADE. SEE DETAIL A3/CU502

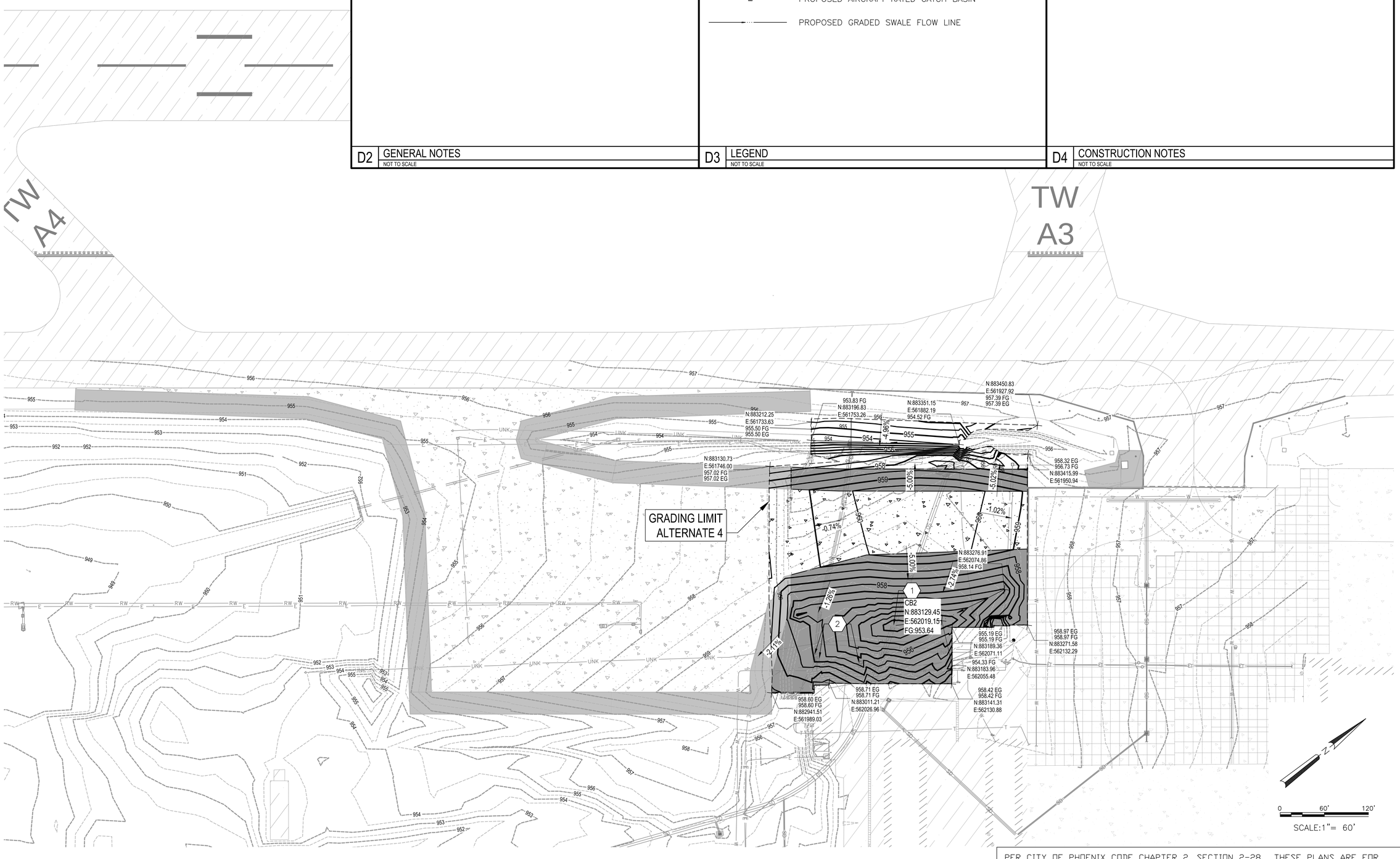

A1 GRADING AND DRAINAGE PLAN
SCALE: 1" = 60'

PER CITY OF PHOENIX CODE CHAPTER 2, SECTION 2-28. THESE PLANS ARE FOR OFFICIAL USE ONLY AND MAY NOT BE SHARED WITH OTHERS EXCEPT AS REQUIRED TO FULFILL THE OBLIGATIONS OF CONTRACTOR'S CONTRACT WITH THE CITY OF PHOENIX.

C&S COMPANIES

Registered Professional Engineer (Civil) CERTIFICATE NO. 33442 LANCE R. McINTOSH Date Signed 02-06-23 ARIZONA, U.S.A.

Expires: 3-31-23

PER CITY OF PHOENIX CITY CODE CHAPTER 2, SECTION 2-28 THESE PLANS ARE FOR OFFICIAL USE ONLY AND MAY NOT BE SHARED WITH OTHERS EXCEPT AS REQUIRED TO FULFILL THE OBLIGATIONS OF YOUR CONTRACT WITH THE CITY OF PHOENIX

NO.	REVISIONS / SUBMISSIONS	DATE

PHX DVT CYR

CITY OF PHOENIX AVIATION DEPARTMENT

PHOENIX GOODYEAR AIRPORT
NEW APRON AND TAXIWAY CONNECTOR

AV41000077 FAA/ADOT

Designed by: RB
Drawn by: RB
Checked by: LM
Date: February 2023
Dwg scale: ---

CIP NO.(S): AV41000077 FAA/ADOT

Sheet Overview Title

GRADING AND DRAINAGE PLAN
BID ALT 4

Sheet Reference Number:

CU105

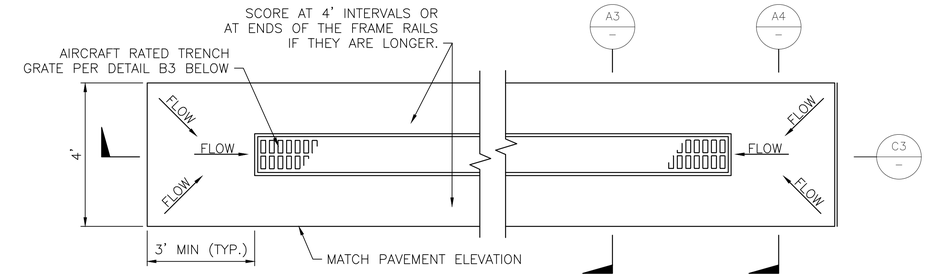

D3 TRENCH DRAIN PLAN VIEW

NOT TO SCALE

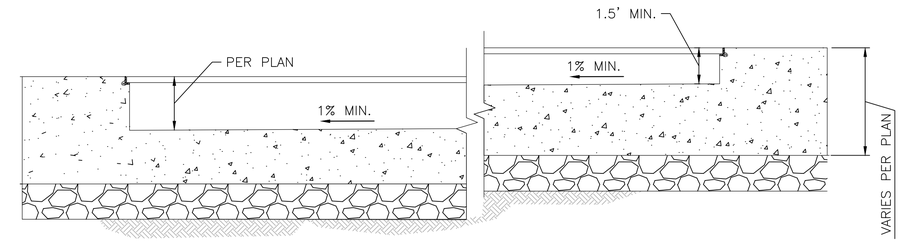

C3 TRENCH DRAIN SECTION PROFILE

NOT TO SCALE

GENERAL NOTES

1. *Pipes shall be installed either in a trench condition or in a non-trench condition in natural ground or in embankment.*
2. *In a trench condition, the vertical and horizontal limits shall be maintained. If horizontal limits are exceeded or the vertical limits are not maintained, a non-trench condition exists.*
3. *Bracing and sloping shall conform to OSHA requirements.*
4. *Bedding material shall be used for pipe backfill on thermoplastic pipes, and may be used for pipe backfill on other pipes.*
5. *In a non-trench condition, the embankment for pipe stability shall be constructed in lifts to the limits shown in the detail simultaneously with the bedding material and pipe backfill. If the contractor chooses to construct it as a trench condition, the embankment shall be constructed before excavating the trench.*

D - Outside diameter of full circle pipe or outside dimension (span or rise) of arch, arch pipe, elliptical pipe.

T - Minimum wall thickness for NRCIPCP: See Plans.

▲ *For D < 48": Minimum ▲ = 6"●*
Maximum ▲ = 24"

For D ≥ 48": Minimum ▲ = 12"●
Maximum ▲ = 36"

● *For thermoplastic pipe:*
Minimum ▲ =0.25D+6"

◐ *- 6 inches except when on unyielding or unstable material. See Std Specs.*

■ *= 3D for thermoplastic pipe with D > 30" and fill height > 10'.*

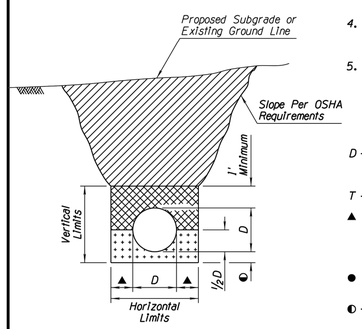

TRENCH CONDITION
IN NATURAL GROUND OR IN EMBANKMENT
WITHOUT BRACING

TRENCH BACKFILL

PIPE BACKFILL

BEDDING

B2 PIPE TRENCHING DETAIL

NOT TO SCALE

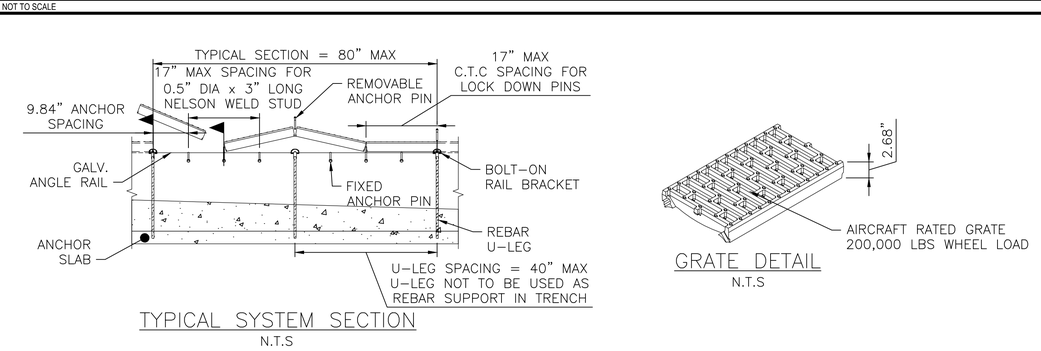

B3 TRENCH DRAIN GRATE DETAILS

NOT TO SCALE

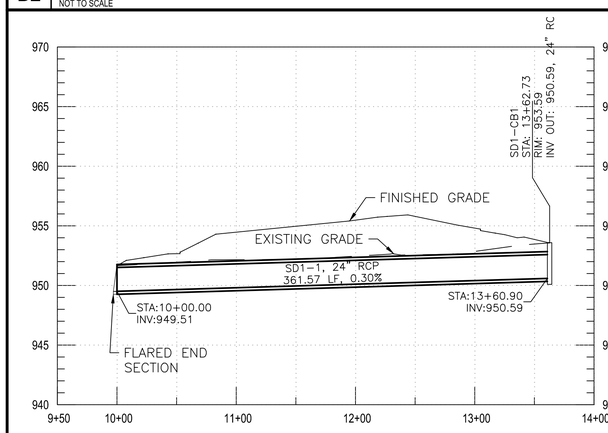

A2 STORM DRAINAGE PROFILE SD1

HOR SCALE: 1" = 60', VERT SCALE: 1" = 6'

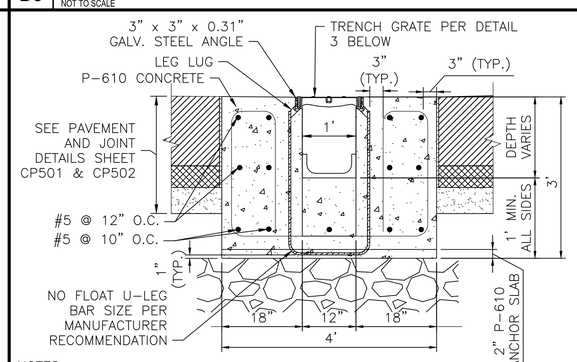

NOTES:

1. U-LEG SPACING 40" MAX. U-LEG NOT TO BE USED AS REBAR SUPPORT.
2. TWO POUR OPERATION ANCHOR SLAB SHALL BE INSTALLED PRIOR TO INSTALLATION OF TRENCH DRAIN ENCASEMENT.

A3 TRENCH DRAIN SECTION

NOT TO SCALE

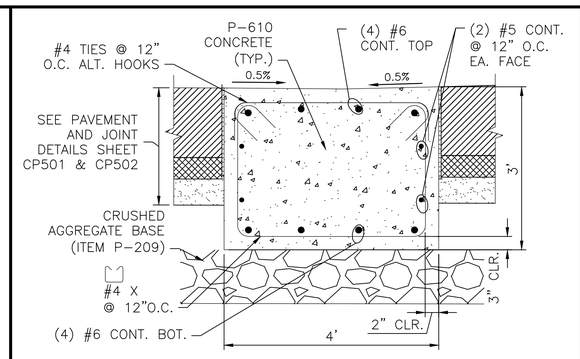

A4 TRENCH DRAIN END SECTION

NOT TO SCALE

PER CITY OF PHOENIX CODE CHAPTER 2, SECTION 2-28. THESE PLANS ARE FOR OFFICIAL USE ONLY AND MAY NOT BE SHARED WITH OTHERS EXCEPT AS REQUIRED TO FULFILL THE OBLIGATIONS OF YOUR CONTRACT WITH THE CITY OF PHOENIX.

PER CITY OF PHOENIX CODE CHAPTER 2, SECTION 2-28 THESE PLANS ARE FOR OFFICIAL USE ONLY AND MAY NOT BE SHARED WITH OTHERS EXCEPT AS REQUIRED TO FULFILL THE OBLIGATIONS OF YOUR CONTRACT WITH THE CITY OF PHOENIX

NO.	REVISIONS / SUBMISSIONS	DATE

PSX DVT CYR
CITY OF PHOENIX AVIATION DEPARTMENT
PHOENIX GOODYEAR AIRPORT
NEW APRON AND TAXIWAY CONNECTOR
AV41000077 FAA/ADOT

Designed by: RB
Drawn by: RB
Checked by: LM
Date: February 2023
Dwg scale: —

CIP NO.(S): AV41000077 FAA/ADOT

Sheet Overview Title

GRADING AND DRAINAGE DETAILS

Sheet Reference Number:

CU501

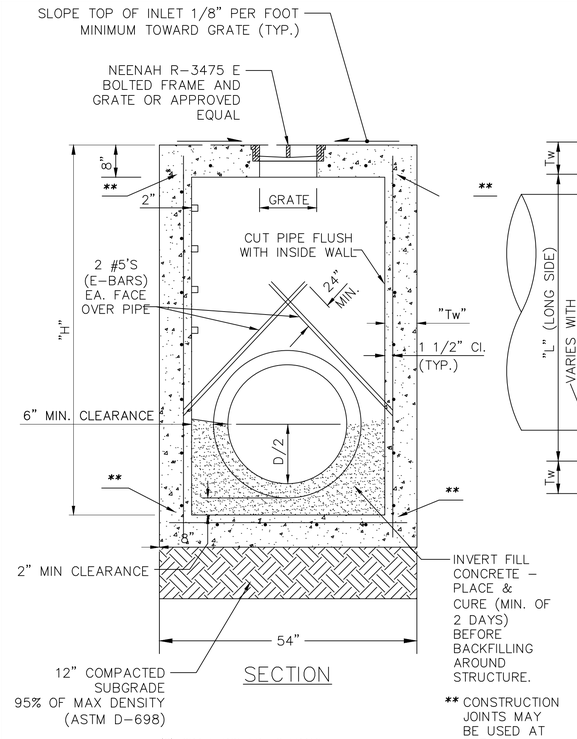

SECTION

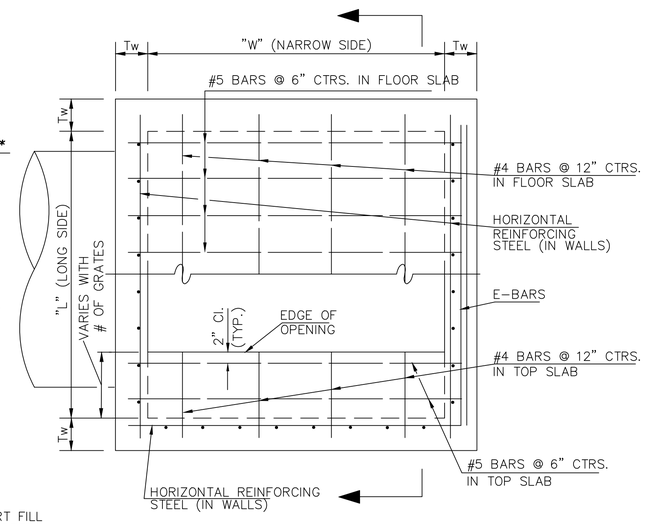

PLAN

** CONSTRUCTION JOINTS MAY BE USED AT THE CONNTRACTOR'S OPTION.

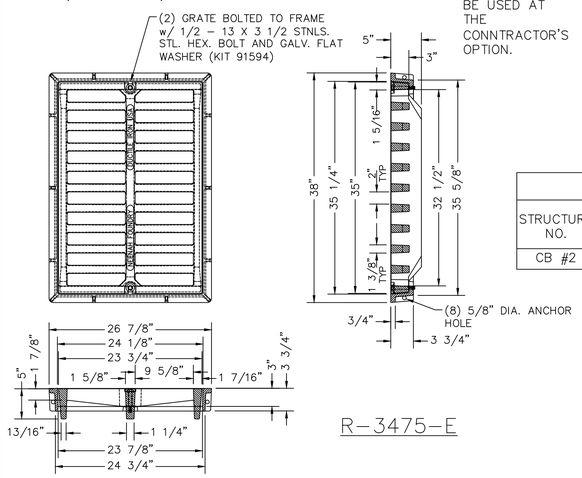

R-3475-E

INLET SCHEDULE			
STRUCTURE NO.	MODEL	SIZE L x W x H	# OF GRATE UNITS
CB #2	R-3475-E	4'-6" X 2'-6" X 5.82'	1

WALLS					
"H"	"Tw"	VERT. STEEL		HORZ. STEEL	
		SIZE	SPACE	SIZE	SPACE
3.0'-6.0'	8"	#4	12"	#4	12"

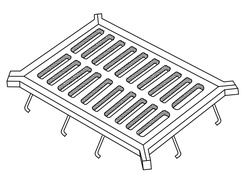

NOTES:

1. MANHOLE STEPS SHALL BE INSTALLED ON LONG SIDE OF INLET AT 12" SPACING WITH BOTTOM STEP NO MORE THAN 3' ABOVE INVERT CONCRETE BENCH. STEPS SHALL NOT BE USED WHERE "H" IS LESS THAN 6.0 FEET UNLESS OTHERWISE DIRECTED BY THE ENGINEER.
2. LOCATE GRATE(S) ABOVE STEPS AS NECESSARY TO PROVIDE ACCESS.
3. GRATES SHALL BE DESIGNED FOR MINIMUM 15,000 LB. WHEEL LOAD AND 100 P.S.I. TIRE PRESSURE. THE GRATES WERE SIZED USING AN OPEN AREA OF 2.4 SQUARE FEET PER UNIT.
4. STEEL WAS GRADE 60, CONCRETE WAS 6 SACK MIX.
5. WHEN CONSTRUCTION JOINTS ARE UTILIZED CONSTRUCT A 2"X2" KEYWAY IN THE CONCRETE THAT IS TO BE JOINED BY A NEW POUR.

R-3475-E AIRPORT DRAINAGE INLET WITH BOLTED FRAME AND SINGLE GRATE

HEAVY DUTY TOTAL WEIGHT 575 POUNDS

DESIGNED TO SUPPORT A WHEEL LOAD OF 225 P.S.I. CAN BE FURNISHED COUNTERSUNK HEXAGONAL-HEAD STAINLESS STEEL CAP SCREWS IF SPECIFIED. FURNISHED WITH MACHINED BEARING SURFACES.

SPECIFY:
1. CATALOG NUMBER.
2. GRATES BOLTED TO FRAME.
3. COMPLETE LOADING INFORMATION.

A1 AIRCRAFT RATED CATCH BASIN (CATCH BASIN #1) DETAIL
NOT TO SCALE

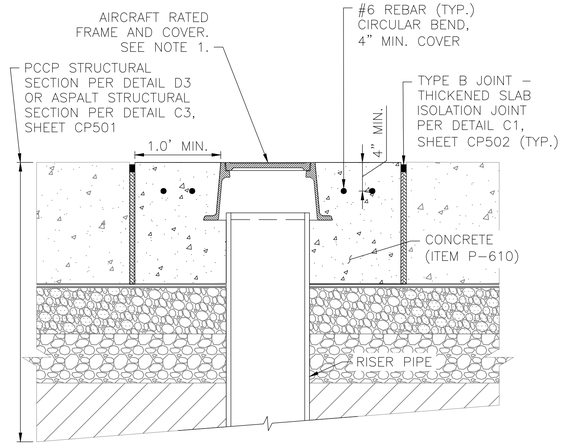

SECTION A - A

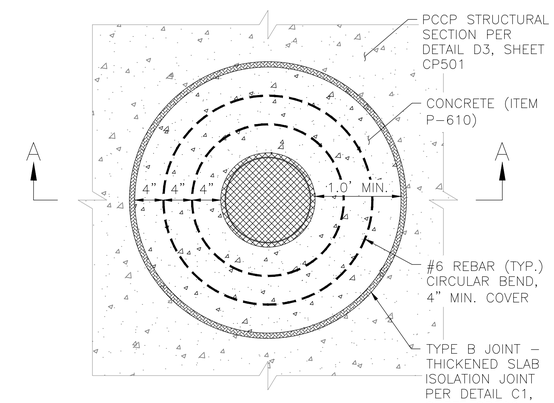

PLAN VIEW

NOTES:

1. EJ SERIES 1564Z CLEANOUT/MONUMENT BOX FRAME AND COVER, OR APPROVED EQUAL. AIRCRAFT RATED COVER SHALL READ "WATER".
2. VALVE BOX SHALL BE ADJUSTED TO THE FINISHED GRADE PRIOR TO PLACEMENT OF CONCRETE.
3. REQUIRED MINIMUM COMPACTED DENSITIES OF SUBLAYERS SHALL BE PER THE RESPECTIVE ITEMS SHOWN WITHIN DETAIL D3, SHEET CP501.
4. CUT RISER PIPE TO LENGTH IN FIELD. CAUTION: IF EXISTING RISER IS ASESTOS-CEMENT PIPE (ACP) FOLLOW OSHA GUIDELINES FOR WORKING WITH ACP.
5. CONCRETE SHALL BE PER ITEM P-610.
6. WATER VALVE EXTENSIONS SHALL BE INSTALLED WHEN DIMENSION FROM FINISHED GRADE TO THE TOP OF THE OPERATING NUT EXCEEDS 5 FEET. SEE MAG STD. DTL 393 FOR VALVE EXTENSION.

A3 VALVE BOX INSTALLATION AND GRADE ADJUSTMENT (MODIFIED MAG. STD. DTL 391-1)
NOT TO SCALE

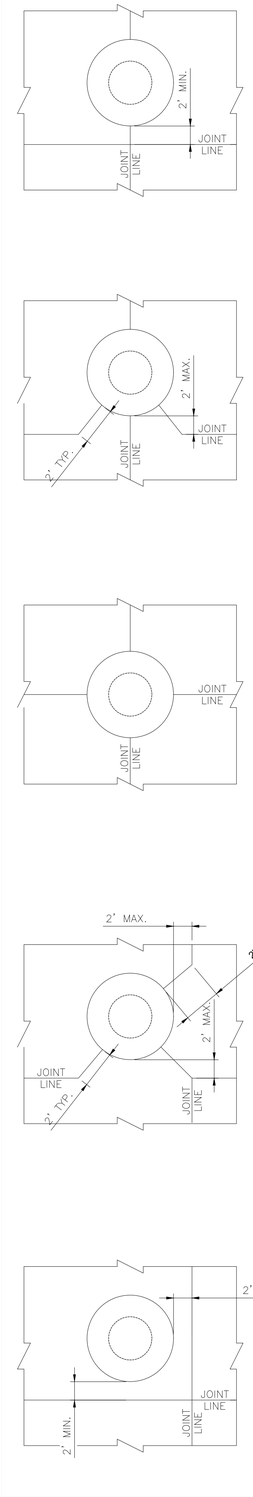

OPTION 1: STRUCTURE CENTER WITHIN 6" OF ONE JOINT AND THE OTHER JOINT AT LEAST 2' FROM ISOLATION RING.

OPTION 2: STRUCTURE CENTER WITHIN 6" OF 1 JOINT AND THE OTHER JOINT WITHIN 2' OF THE ISOLATION RING.

OPTION 3: STRUCTURE CENTER WITHIN 6" OF BOTH JOINTS

OPTION 4: STRUCTURE CENTER BETWEEN 6" AND 2' FROM JOINTS IN BOTH DIRECTIONS

OPTION 5: STRUCTURE CENTER GREATER THAN 2' FROM ANY JOINT.

A4 JOINT MODIFICATIONS AT CIRCULAR UTILITY VALVE
NOT TO SCALE

PER CITY OF PHOENIX CODE CHAPTER 2, SECTION 2-28. THESE PLANS ARE FOR OFFICIAL USE ONLY AND MAY NOT BE SHARED WITH OTHERS EXCEPT AS REQUIRED TO FULFILL THE OBLIGATIONS OF CONTRACTOR'S CONTRACT WITH THE CITY OF PHOENIX.

C&S COMPANIES

Registered Professional Engineer (Civil) CERTIFICATE NO. 33442 LANCE R. McINTOSH Date Signed 02-06-23 ARIZONA, U.S.A.

Expires: 3-31-23

NO.	REVISIONS / SUBMISSIONS	DATE

PER CITY OF PHOENIX CITY CODE CHAPTER 2, SECTION 2-28 THESE PLANS ARE FOR OFFICIAL USE ONLY AND MAY NOT BE SHARED WITH OTHERS EXCEPT AS REQUIRED TO FULFILL THE OBLIGATIONS OF YOUR CONTRACT WITH THE CITY OF PHOENIX.

PHX DWT CYR
CITY OF PHOENIX AVIATION DEPARTMENT
PHOENIX GOODYEAR AIRPORT
NEW APRON AND TAXIWAY CONNECTOR
AV41000077 FAA/ADOT

Designed by: RB
Drawn by: RB
Checked by: LM
Date: February 2023
Dwg. scale: —
CIP NO.(S): AV41000077 FAA/ADOT

Sheet Overview Title
GRADING AND DRAINAGE DETAILS

Sheet Reference Number:
CU502

EXISTING ASPHALTIC CONCRETE PAVEMENT

EXISTING CONCRETE PAVEMENT

PROPOSED FULL STRENGTH AC PAVEMENT STRUCTURAL SECTION

PROPOSED AC SHOULDER PAVEMENT STRUCTURAL SECTION

PROPOSED PCCP PAVEMENT STRUCTURAL SECTION

D3 LEGEND
NOT TO SCALE

1. PAINT YELLOW REFLECTORIZED TAXIWAY CENTERLINE MARKING PER DETAIL D4, SHEET CM501 (BASE BID). ITEM P-620.
2. PAINT YELLOW REFLECTORIZED CONTINUOUS DOUBLE TAXIWAY EDGE MARKING PER DETAIL C4, SHEET CM501 (BASE BID). ITEM P-620.
3. PAINT YELLOW REFLECTORIZED NON-MOVEMENT AREA MARKING PER DETAIL A4, SHEET CM501 (BASE BID). ITEM P-620.
4. MATCH EXISTING MARKING.
5. PAINT YELLOW REFLECTORIZED TAXIWAY CENTERLINE MARKING PER DETAIL D4, SHEET CM501 (BASE BID). ITEM P-620.
6. PAINT YELLOW REFLECTORIZED CONTINUOUS DOUBLE TAXIWAY EDGE MARKING PER DETAIL C4, SHEET CM501 (BASE BID). ITEM P-620.
7. PAINT YELLOW REFLECTORIZED NON-MOVEMENT AREA MARKING PER DETAIL A4, SHEET CM501 (BASE BID). ITEM P-620.

D4 CONSTRUCTION NOTES
NOT TO SCALE

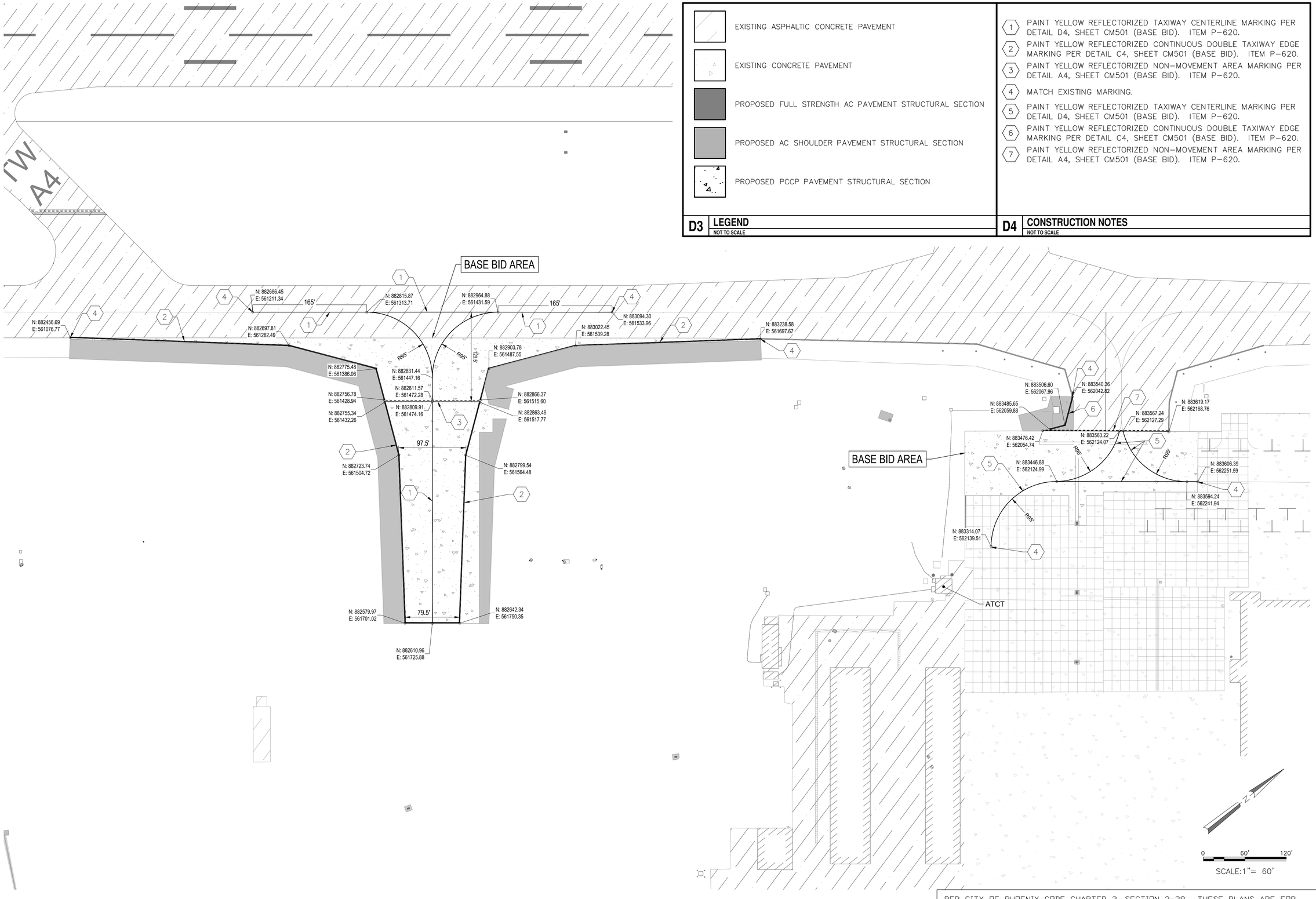

A1 GEOMETRY PLAN
SCALE: 1" = 60'

PER CITY OF PHOENIX CODE CHAPTER 2, SECTION 2-28. THESE PLANS ARE FOR OFFICIAL USE ONLY AND MAY NOT BE SHARED WITH OTHERS EXCEPT AS REQUIRED TO FULFILL THE OBLIGATIONS OF CONTRACTOR'S CONTRACT WITH THE CITY OF PHOENIX.

C&S COMPANIES

Registered Professional Engineer (Civil) CERTIFICATE NO. 33442 LANCE R. McINTOSH Date Signed 02-28-23 ARIZONA U.S.A.
Expires: 3-31-23

PER CITY OF PHOENIX CITY CODE CHAPTER 2, SECTION 2-28 THESE PLANS ARE FOR OFFICIAL USE ONLY AND MAY NOT BE SHARED WITH OTHERS EXCEPT AS REQUIRED TO FULFILL THE OBLIGATIONS OF YOUR CONTRACT WITH THE CITY OF PHOENIX

NO.	REVISIONS / SUBMISSIONS	DATE

PHX DVT CYR
CITY OF PHOENIX AVIATION DEPARTMENT
PHOENIX GOODYEAR AIRPORT
NEW APRON AND TAXIWAY CONNECTOR
AV41000077 FAA/ADOT

Designed by: NM
Drawn by: RB
Checked by: LM
Date: February 2023
Dwg scale: ---

CIP NO.(S): AV41000077 FAA/ADOT

Sheet Overview Title
MARKING PLAN
BASE BID

Sheet Reference Number:
CM101

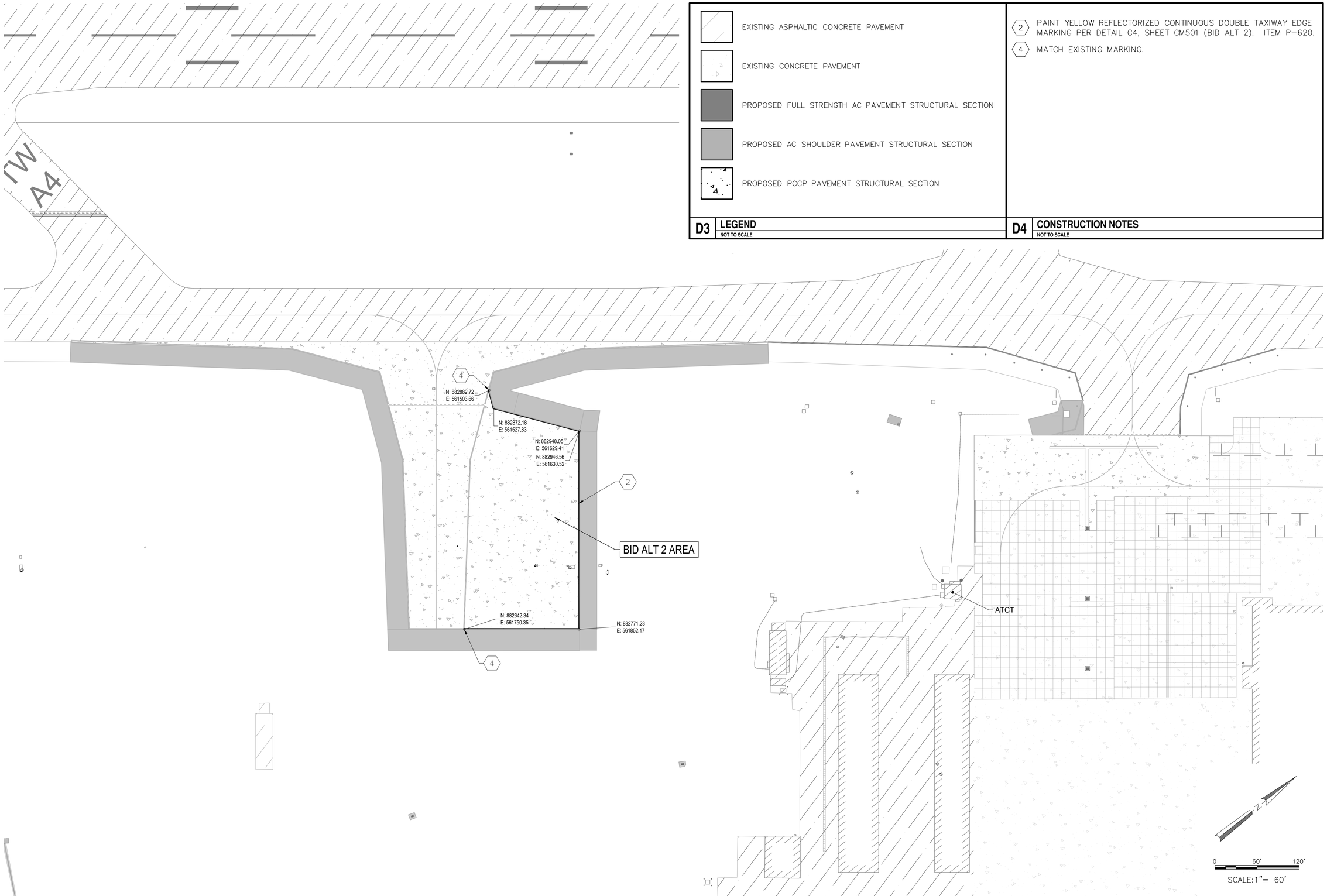

EXISTING ASPHALTIC CONCRETE PAVEMENT	2 PAINT YELLOW REFLECTORIZED CONTINUOUS DOUBLE TAXIWAY EDGE MARKING PER DETAIL C4, SHEET CM501 (BID ALT 2). ITEM P-620.
EXISTING CONCRETE PAVEMENT	4 MATCH EXISTING MARKING.
PROPOSED FULL STRENGTH AC PAVEMENT STRUCTURAL SECTION	
PROPOSED AC SHOULDER PAVEMENT STRUCTURAL SECTION	
PROPOSED PCCP PAVEMENT STRUCTURAL SECTION	

D3 LEGEND
NOT TO SCALE

D4 CONSTRUCTION NOTES
NOT TO SCALE

A1 GEOMETRY PLAN
SCALE: 1" = 60'

PER CITY OF PHOENIX CODE CHAPTER 2, SECTION 2-28. THESE PLANS ARE FOR OFFICIAL USE ONLY AND MAY NOT BE SHARED WITH OTHERS EXCEPT AS REQUIRED TO FULFILL THE OBLIGATIONS OF CONTRACTOR'S CONTRACT WITH THE CITY OF PHOENIX.

C&S COMPANIES

Registered Professional Engineer (Civil)
CERTIFICATE NO. 33442
LANCE R. McINTOSH
Date Signed 02-06-23
ARIZONA, U.S.A.
Expires: 3-31-23

PER CITY OF PHOENIX CITY CODE CHAPTER 2, SECTION 2-28 THESE PLANS ARE FOR OFFICIAL USE ONLY AND MAY NOT BE SHARED WITH OTHERS EXCEPT AS REQUIRED TO FULFILL THE OBLIGATIONS OF YOUR CONTRACT WITH THE CITY OF PHOENIX.

NO.	REVISIONS / SUBMISSIONS	DATE

PHX DVT CYR
CITY OF PHOENIX AVIATION DEPARTMENT
PHOENIX GOODYEAR AIRPORT
NEW APRON AND TAXIWAY CONNECTOR
AV41000077 FAA/ADOT

Designed by: NM
Drawn by: RB
Checked by: LM
Date: February 2023
Dwg scale: ---

CIP NO.(S): AV41000077 FAA/ADOT

Sheet Overview Title
MARKING PLAN
BID ALT 2

Sheet Reference Number:
CM501

EXISTING ASPHALTIC CONCRETE PAVEMENT

EXISTING CONCRETE PAVEMENT

PROPOSED FULL STRENGTH AC PAVEMENT STRUCTURAL SECTION

PROPOSED AC SHOULDER PAVEMENT STRUCTURAL SECTION

PROPOSED PCCP PAVEMENT STRUCTURAL SECTION

D3 LEGEND
NOT TO SCALE

(2) PAINT YELLOW REFLECTORIZED CONTINUOUS DOUBLE TAXIWAY EDGE MARKING PER DETAIL C4, SHEET CM501 (BID ALT 2). ITEM P-620.

(4) MATCH EXISTING MARKING.

D4 CONSTRUCTION NOTES
NOT TO SCALE

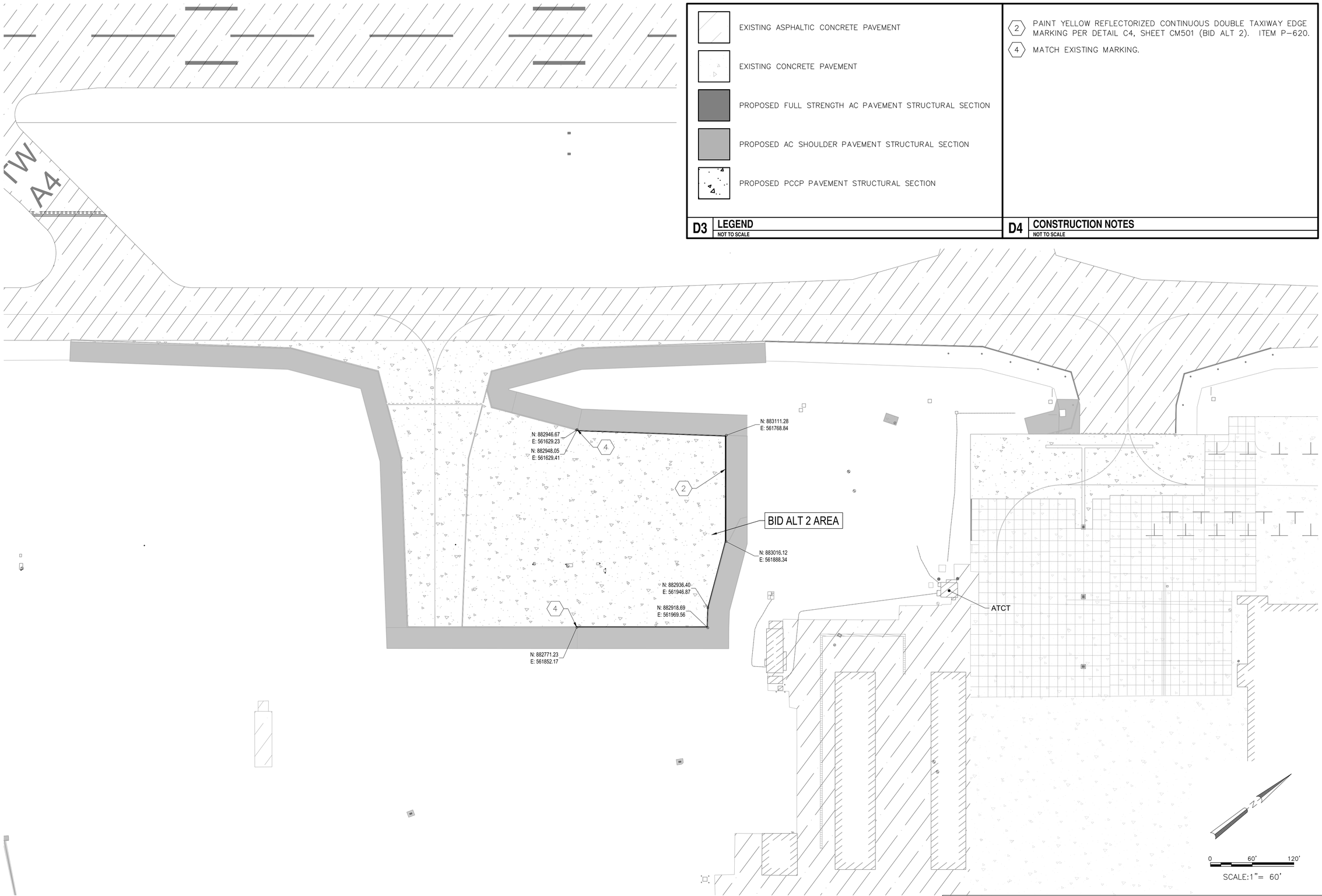

A1 GEOMETRY PLAN
SCALE: 1" = 60'

PER CITY OF PHOENIX CODE CHAPTER 2, SECTION 2-28. THESE PLANS ARE FOR OFFICIAL USE ONLY AND MAY NOT BE SHARED WITH OTHERS EXCEPT AS REQUIRED TO FULFILL THE OBLIGATIONS OF CONTRACTOR'S CONTRACT WITH THE CITY OF PHOENIX.

C&S COMPANIES

Registered Professional Engineer (Civil) CERTIFICATE NO. 33442 LANCE R. McINTOSH Date Signed 02-28-23 ARIZONA U.S.A.
Expires: 3-31-23

NO.	REVISIONS / SUBMISSIONS	DATE

PER CITY OF PHOENIX CODE CHAPTER 2, SECTION 2-28 THESE PLANS ARE FOR OFFICIAL USE ONLY AND MAY NOT BE SHARED WITH OTHERS EXCEPT AS REQUIRED TO FULFILL THE OBLIGATIONS OF YOUR CONTRACT WITH THE CITY OF PHOENIX

PHX DWT CYR
CITY OF PHOENIX AVIATION DEPARTMENT
PHOENIX GOODYEAR AIRPORT
NEW APRON AND TAXIWAY CONNECTOR
AV41000077 FAA/ADOT

Designed by: NM
Drawn by: RB
Checked by: LM
Date: February 2023
Dwg scale: —
CIP NO.(S): AV41000077 FAA/ADOT

Sheet Overview Title
MARKING PLAN
BID ALT 3

Sheet Reference Number:
CM103

EXISTING ASPHALTIC CONCRETE PAVEMENT	
EXISTING CONCRETE PAVEMENT	
PROPOSED FULL STRENGTH AC PAVEMENT STRUCTURAL SECTION	
PROPOSED AC SHOULDER PAVEMENT STRUCTURAL SECTION	
PROPOSED PCCP PAVEMENT STRUCTURAL SECTION	

D3 LEGEND
NOT TO SCALE

1. PAINT YELLOW REFLECTORIZED TAXIWAY CENTERLINE MARKING PER DETAIL D4, SHEET CM501 (BID ALT 4). ITEM P-620.
2. PAINT YELLOW REFLECTORIZED CONTINUOUS DOUBLE TAXIWAY EDGE MARKING PER DETAIL C4, SHEET CM501 (BID ALT 4). ITEM P-620.
4. MATCH EXISTING MARKING.

D4 CONSTRUCTION NOTES
NOT TO SCALE

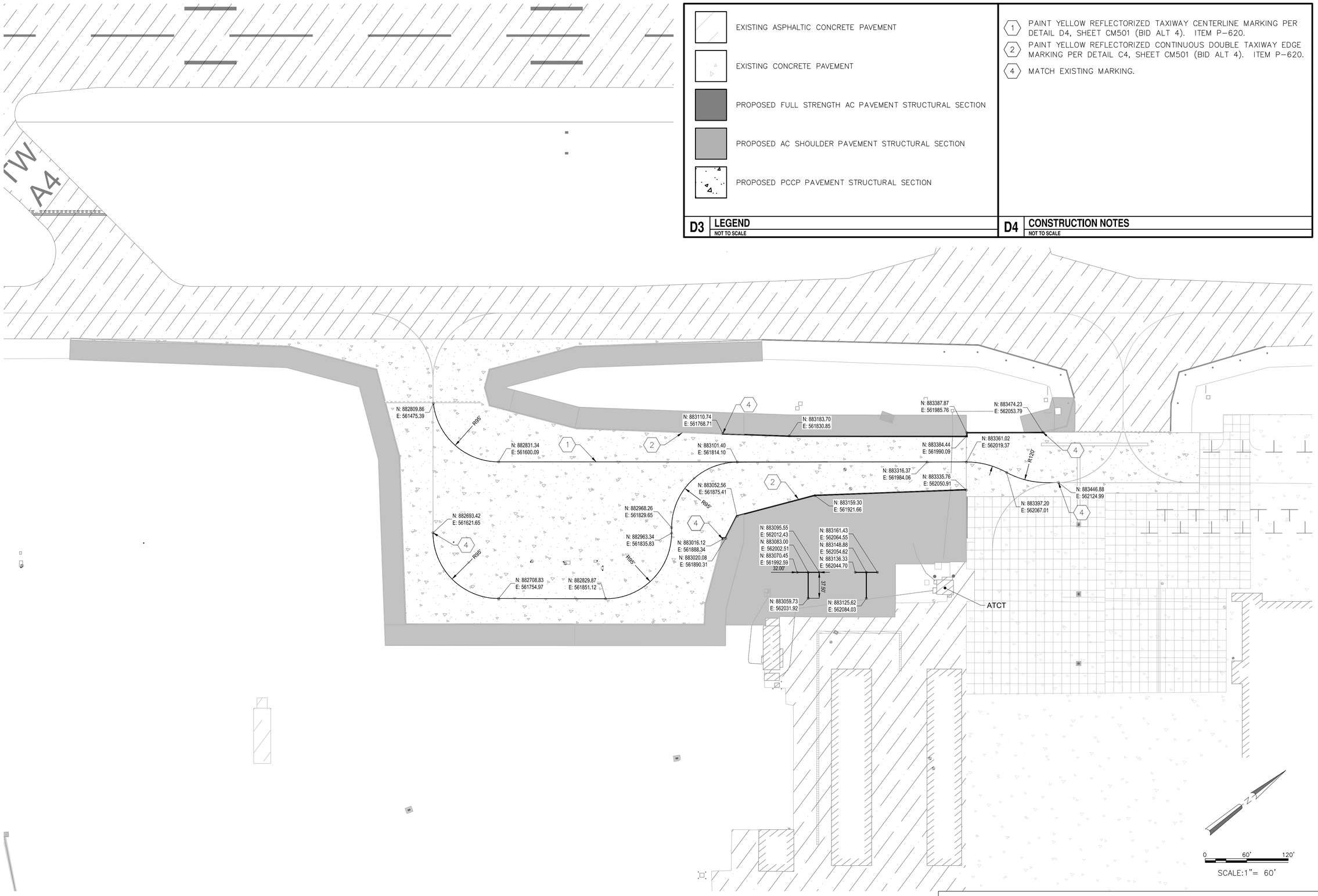

A1 GEOMETRY PLAN
SCALE: 1" = 60'

PER CITY OF PHOENIX CODE CHAPTER 2, SECTION 2-28. THESE PLANS ARE FOR OFFICIAL USE ONLY AND MAY NOT BE SHARED WITH OTHERS EXCEPT AS REQUIRED TO FULFILL THE OBLIGATIONS OF CONTRACTOR'S CONTRACT WITH THE CITY OF PHOENIX.

C&S COMPANIES

Registered Professional Engineer (Civil) CERTIFICATE NO. 33442 LANCE R. McINTOSH Date Signed 02-28-23 ARIZONA, U.S.A.
Expires: 3-31-23

PER CITY OF PHOENIX CITY CODE CHAPTER 2, SECTION 2-28 THESE PLANS ARE FOR OFFICIAL USE ONLY AND MAY NOT BE SHARED WITH OTHERS EXCEPT AS REQUIRED TO FULFILL THE OBLIGATIONS OF YOUR CONTRACT WITH THE CITY OF PHOENIX

NO.	REVISIONS / SUBMISSIONS	DATE

PHX DVT CYR
CITY OF PHOENIX AVIATION DEPARTMENT
PHOENIX GOODYEAR AIRPORT
NEW APRON AND TAXIWAY CONNECTOR
AV41000077 FAA/ADOT

Designed by: NM
Drawn by: RB
Checked by: LM
Date: February 2023
Dwg scale: ___
CIP NO.(S): AV41000077 FAA/ADOT

Sheet Overview Title
MARKING PLAN
BID ALT 4

Sheet Reference Number:
CM104

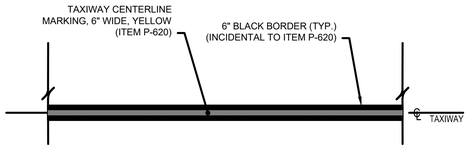

NOTES:

1. TAXIWAY CENTERLINE MARKINGS ARE INTERRUPTED FOR ALL RUNWAY MARKINGS UNLESS OTHERWISE NOTED.

D4 **TAXIWAY CENTERLINE MARKING DETAIL**
NOT TO SCALE

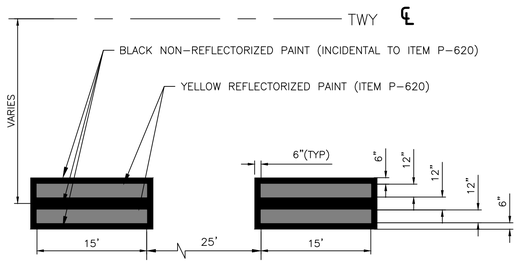

C3 **DASHED TAXIWAY EDGE MARKING**
NOT TO SCALE

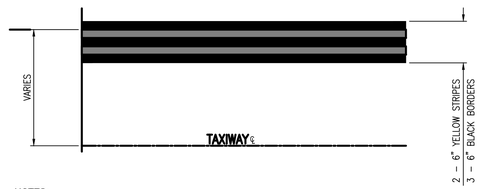

NOTES:

1. THE CONTINUOUS TAXIWAY EDGE MARKING SHALL BE INTERRUPTED FOR RUNWAY HOLDING POSITION MARKINGS, INTERMEDIATE HOLDING POSITION MARKINGS, ILS/MLS HOLDING POSITION MARKINGS, AND NON-MOVEMENT AREA MARKINGS.
2. THE CONTINUOUS TAXIWAY EDGE MARKINGS SHALL BEGIN AND END AT THE BLACK BORDER ASSOCIATED WITH THE ABOVE MENTIONED MARKINGS.
3. EDGE STRIPES WILL NOT HAVE AN OUTSIDE BORDER IF THERE IS NO PAVED SHOULDER.
4. BLACK NON-REFLECTORIZED BORDER MARKINGS SHALL BE INCIDENTAL TO ITEM P-620.

C4 **CONTINUOUS DOUBLE SOLID TAXIWAY EDGE MARKING**
NOT TO SCALE

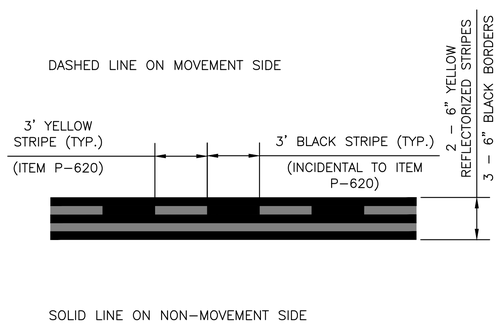

A4 **NON MOVEMENT AREA MARKING DETAIL**
NOT TO SCALE

PER CITY OF PHOENIX CODE CHAPTER 2, SECTION 2-28. THESE PLANS ARE FOR OFFICIAL USE ONLY AND MAY NOT BE SHARED WITH OTHERS EXCEPT AS REQUIRED TO FULFILL THE OBLIGATIONS OF CONTRACTOR'S CONTRACT WITH THE CITY OF PHOENIX.

C&S COMPANIES

Registered Professional Engineer (Civil) CERTIFICATE NO. 33442 LANCE R. McINTOSH Date Signed 02-06-23 ARIZONA, U.S.A.

Expires: 3-31-23

PER CITY OF PHOENIX CITY CODE CHAPTER 2, SECTION 2-28 THESE PLANS ARE FOR OFFICIAL USE ONLY AND MAY NOT BE SHARED WITH OTHERS EXCEPT AS REQUIRED TO FULFILL THE OBLIGATIONS OF YOUR CONTRACT WITH THE CITY OF PHOENIX

NO.	REVISIONS / SUBMISSIONS	DATE

PHX DVT CYR
CITY OF PHOENIX AVIATION DEPARTMENT
PHOENIX GOODYEAR AIRPORT
NEW APRON AND TAXIWAY CONNECTOR
AV41000077 FAA/ADOT

Designed by: NM
Drawn by: RB
Checked by: LM
Date: February 2023
Dwg scale: —

CIP NO.(S): AV41000077 FAA/ADOT

Sheet Overview Title

MARKING DETAILS

Sheet Reference Number:

CM501

ELECTRICAL ABBREVIATIONS:

2/C	TWO CONDUCTORS
ATCT	AIR TRAFFIC CONTROL TOWER
BCC	BARE COPPER GROUND
CE	CONCRETE ENCASED
CKT	CIRCUIT
COMM	COMMUNICATIONS
DIA	DIAMETER
FAA	FEDERAL AVIATION ADMINISTRATION
FMC	FLEXIBLE METAL CONDUIT
GRS	GALVANIZED RIGID STEEL
LED	LIGHT EMITTING DIODE
LF	LINEAR FEET
NPI	NON PAY ITEM
OFA	OBJECT FREE AREA
PAPI	PRECISION APPROACH PATH INDICATOR
PVC	POLY–VINYL CHLORIDE
REIL	RUNWAY END INDICATOR LIGHT
RGL	RUNWAY GUARD LIGHT
RSA	RUNWAY SAFETY AREA
SE	SLURRY ENCASED
SES	SERVICE ENTRANCE SECTION
SGN	SIGN
SWS	SURFACE WEATHER OBSERVATION STATION
TSA	TAXIWAY SAFETY AREA
TYP	TYPICAL

ELECTRICAL LEGEND:

(UNLESS OTHERWISE NOTED ON PLANS)

- PVC W/#8–5KV L–824 TYPE "C" CABLE PER INDICATED LIGHTING CIRCUIT. (QUANTITY AND SIZE AS INDICATED ON PLAN SHEETS)
- EXISTING ELECTRICAL CONDUIT AND CONDUCTOR
- EXISTING SPARE CONDUCT DUCTBANKS EXTENDED FIVE (5) FEET BEYOND EDGE OF NEW TAXIWAY SHOULDER AND CAPPED
- EXISTING AIRFIELD GUIDANCE SIGN
- EXISTING TAXIWAY EDGE LIGHT
- H — EXISTING HANDHOLE
- H — NEW HANDHOLE
- NEW L–858(L) LED AIRFIELD GUIDANCE SIGN
- NEW L–861T(LED) ELEVATED TAXIWAY EDGE LIGHT ON NEW L–867 BASE
- NEW APRON LIGHT
- A — SIGN FACE; ←A3 A→ / ←D A D→ — X — SIGN NUMBER; B — SIGN FACE
- PB — NEW PULLBOX

AIRFIELD CIRCUITS:

PPN	PAPI NORTH	RW	RUNWAY
PPS	PAPI SOUTH	SG	SIGN
RGL	RUNWAY GUARD LIGHT	TWN	TAXIWAY NORTH
RLN	REIL NORTH	TWS	TAXIWAY SOUTH
RLS	REIL SOUTH		

ADVISORY CIRCULARS FOR AIRPORT PROJECTS (USE LATEST VERSION):

150/5340–18	STANDARDS FOR AIRPORT SIGN SYSTEMS
150/5340–30	DESIGN AND INSTALLATION DETAILS FOR AIRPORT VISUAL AIDS
150/5345–7	SPECIFICATION FOR L–824 UNDERGROUND ELECTRICAL CABLE FOR AIRPORT LIGHTING CIRCUITS
150/5345–26	SPECIFICATION FOR L–823 PLUG AND RECEPTACLE, CABLE CONNECTORS
150/5345–42	SPECIFICATION FOR AIRPORT LIGHT BASES, TRANSFORMER HOUSINGS, JUNCTION BOXES, AND ACCESSORIES
150/5345–44	SPECIFICATION FOR RUNWAY AND TAXIWAY SIGNS
150/5345–46	SPECIFICATION FOR RUNWAY AND TAXIWAY LIGHT FIXTURES
150/5345–47	SPECIFICATION FOR SERIES TO SERIES ISOLATION TRANSFORMERS FOR AIRPORT LIGHTING SYSTEMS
150/5345–53	AIRPORT LIGHTING EQUIPMENT CERTIFICATION PROGRAM
150/5370–2	OPERATIONAL SAFETY ON AIRPORTS DURING CONSTRUCTION
150/5370–10	STANDARDS FOR SPECIFYING CONSTRUCTION OF AIRPORTS
ADDENDUM	AIRPORT LIGHTING EQUIPMENT CERTIFICATION PROGRAM (PUBLISHED MONTHLY AND LISTING APPROVED SUPPLIERS)

SHEET INDEX

CR engineers
16719 East Palisades Blvd., Suite 202
Fountain Hills, AZ 85268
Phone: (480) 816-5541
Fax: (480) 816-5540

PER CITY OF PHOENIX CODE CHAPTER 2, SECTION 2-28. THESE PLANS ARE FOR OFFICIAL USE ONLY AND MAY NOT BE SHARED WITH OTHERS EXCEPT AS REQUIRED TO FULFILL THE OBLIGATIONS OF CONTRACTOR'S CONTRACT WITH THE CITY OF PHOENIX.

C&S COMPANIES

Registered Professional Engineer (Electrical) CERTIFICATE NO. 36696 CATHERINE M. ALCORN Date Signed 05-24-22 Arizona U.S.A.

PER CITY OF PHOENIX CODE CHAPTER 2, SECTION 2-28. THESE PLANS ARE FOR OFFICIAL USE ONLY AND MAY NOT BE SHARED WITH OTHERS EXCEPT AS REQUIRED TO FULFILL THE OBLIGATIONS OF YOUR CONTRACT WITH THE CITY OF PHOENIX

NO.	REVISIONS / SUBMISSIONS	DATE

PHX DVT CYA
CITY OF PHOENIX AVIATION DEPARTMENT
PHOENIX GOODYEAR AIRPORT
NEW APRON AND TAXIWAY CONNECTOR
AV41000077 FAA/ADOT

Designed by: SW
Drawn by: JCA
Checked by: CA
Date: May 2022
Dwg scale:
CIP NO.(S): AV41000077 FAA/ADOT

Sheet Overview Title
ELECTRICAL LEGEND AND NOTES

Sheet Reference Number:
E-101

ELECTRICAL DEMOLITION GENERAL NOTES

1. WITHIN AREAS OF DEMOLITION AND AS OTHERWISE SHOWN, REMOVE IDENTIFIED SIGN BASES, ISOLATION TRANSFORMERS AND OTHER INDICATED ITEMS.
2. CABLE REMOVAL
   A. DIRECT BURIAL: REMOVE FROM WITHIN MANHOLES AND HANDHOLES AND REMOVE IN AREAS WHERE EXCAVATION REQUIRES DISTURBING, ABANDON ELSEWHERE.
   B. IN CONDUIT: REMOVE COMPLETELY BETWEEN NEAREST BASES, HANDHOLES OR MANHOLES.
3. AT INDICATED DEVICES TO BE REMOVED OR IN DEMOLITION AREAS INDICATED, REMOVE ALL CONDUCTORS BACK TO NEAREST MANHOLE OR HANDHOLE OUTSIDE DEMOLITION AREA.
4. SIGNS AND/OR SIGN BASES, CABLES, CONDUITS, DUCTS, ETC. WHICH ARE NOT SPECIFICALLY INDICATED TO BE REMOVED (OR WHICH ARE SHOWN TO REMAIN WITHIN AREAS OF GENERAL DEMOLITION) SHALL REMAIN IN-PLACE AND FUNCTIONAL.
5. CONTRACTOR SHALL VERIFY EQUIPMENT AND CABLE DESIGNATIONS AND STATUS PRIOR TO REMOVAL OR DISCONNECTING.
6. UNLESS OTHERWISE NOTED, ALL REMOVED MATERIAL SHALL BECOME THE PROPERTY OF THE CONTRACTOR AND SHALL BE REMOVED FROM THE SITE AND DISPOSED OF IN ACCORDANCE WITH APPLICABLE LOCAL ORDINANCES. REMOVED LIGHT FIXTURE AND SIGNS NOT DESIGNATED FOR RE-INSTALLATION SHALL BE OFFERED TO AIRPORT FOR RETURN UNLESS OTHERWISE NOTED.
7. DRAWINGS MAY NOT DETAIL ALL EXISTING FACILITIES IN AREAS OF DEMOLITION. CONTRACTOR SHALL REVIEW THE SITE AND RECORD DRAWINGS TO VERIFY THE DEMOLITION EFFORT INVOLVED.
8. EXISTING SIGNS MUST REMAIN OPERATIONAL DURING CONSTRUCTION. TEMPORARY CONNECTIONS TO EXISTING SIGNS REQUIRED DURING RELOCATION. TEMPORARY MOUNTING OF EXISTING SIGNS REQUIRED WHERE NEW LOCATION CONFLICTS WITH EXISTING LOCATION.
9. CONTRACTOR SHALL BE REQUIRED TO HAVE A PRIVATE ON-SITE UTILITY LOCATING COMPANY AND POTHOLE EXISTING UTILITY LINES AS NEEDED.

AIRFIELD LIGHT LOCKOUT/TAGOUT POLICY

THE PURPOSE OF THIS POLICY IS TO STANDARDIZE THE LOCKOUT/TAGOUT PROCEDURES BETWEEN ELECTRICAL CONTRACTORS, GOODYEAR AIRPORT ELECTRICIANS, OPERATIONS AND AIR TRAFFIC CONTROL TOWER (ATCT).

1. GOODYEAR AIRPORT ELECTRICIANS RESPONDING TO A LOCK-OUT/TAG-OUT REQUEST WILL COORDINATE WITH THE ATCT THROUGH OPERATIONS.
2. AFTER OPERATIONS NOTIFIES ELECTRICIANS OF CLOSURES, THE GOODYEAR AIRPORT ELECTRICIANS WILL TURN OFF THE CLOSED RUNWAYS/TAXIWAYS USING THE AIRFIELD COMPUTER SYSTEM.
3. THE CONTRACTOR WILL SUPPLY AN APPROVED BREAKER-LOCKING DEVICE AND LOCK, THEN LOCK OF THE INDIVIDUAL BREAKERS FOR THE CIRCUITS TO BE LOCKED OUT. THESE ITEMS WILL REMAIN IN THE VAULTS IN A LOCK BOX PROVIDED BY GOODYEAR AIRPORT ELECTRICAL SECTION.
4. GOODYEAR AIRPORT ELECTRIC SECTION WILL LOCK THE PANEL DOORS SHUT WITH A HASP AND AN ELECTRICAL SECTION LOCK.
5. THE S-1 CUTOUTS WILL BE PULLED, LOCKED AND PLACED ON THE CORRESPONDING REGULATOR BY THE ELECTRICAL CONTRACTOR.
6. THE ELECTRICAL CONTRACTOR AND GOODYEAR AIRPORT ELECTRICIANS MUST FILL OUT LOCK-OUT FORMS BEFORE LEAVING THE VAULT.
7. UPON COMPLETION OF THE LOCKOUT, THE CONTRACTOR WILL REMOVE ALL LOCKS AND INSTALL THE S-1 CUTOUTS. ALL CIRCUITS MUST BE VERIFIED OPERATIONAL IN THE MANUAL MODE ON THE REGULATOR. OPERATIONS WILL PERFORM A COMPLETE CHECK OF THE LIGHTS IN THE FIELD, TO VERIFY ACTUAL OPERATION.
8. WHEN THAT HAS BEEN COMPLETED, GOODYEAR AIRPORT ELECTRICIANS WILL NOTIFY OPERATIONS WHEN LOCK-IN IS COMPLETE AND REGULATORS ARE IN REMOTE CONTROL; OPERATIONS WILL NOTIFY THE ATCT THAT HAVE CONTROL OF THE AIRFIELD LIGHTING.
9. COMPLETE LOCK-OUT/LOCK-IN FORMS.

THIS PROCEDURAL CHECKLIST MUST BE FOLLOWED TO THE LETTER

ELECTRICAL CONSTRUCTION PHASING NOTES

1. CONTRACTOR SHALL COORDINATE ALL WORK WITH AIRPORT MAINTENANCE, AIRPORT OPERATIONS, AND THE ENGINEER AS NECESSARY.
2. CONTRACTOR SHALL GIVE 72 HOURS NOTICE PRIOR TO WORKING ON OR AROUND ANY DUCTBANKS, HANDHOLES, ETC.
3. CONTRACTOR SHALL MAINTAIN OR HAVE SUFFICIENT MATERIAL/ EQUIPMENT REQUIRED TO PROVIDE TEMPORARY LIGHTING AND CIRCUIT EXTENSIONS. THIS INCLUDES, BUT IS NOT LIMITED TO FIXTURES, TRANSFORMERS, BASES, CONDUIT, L-824 CABLE & L-823 SPLICE KITS. THESE ITEMS WILL NOT BE AVAILABLE FROM THE GOODYEAR MAINTENANCE SHOP.
4. THE CONTRACTOR SHALL MAINTAIN QUALIFIED PERSONNEL WITH THE APPROPRIATE EQUIPMENT, FOR THE INSTALLATION AND SPLICING OF AIRFIELD LIGHTING. SUCH PERSONNEL SHALL BE CAPABLE OF 60 MINUTE RESPONSE TIME IF THEY ARE NOT ALREADY PRESENT ON THE AIRFIELD.
5. TURN OFF AND COVER EXISTING SIGNAGE THAT MAY POTENTIALLY MISDIRECT AIRCRAFT MOVEMENT INTO CLOSED AREAS BARRICADED FOR CONSTRUCTION. SIGNAGE REQUIRING PARTIAL COVERAGE WITH TAXIWAY LOCATION PANELS REMAINING VISIBLE SHALL REMAIN ON WITH ONLY DIRECTIONAL PORTIONS COVERED WITH SECTIONS OF DARK COLORED TARP OR DOUBLE-LAYERED BURLAP THAT DOES NOT PERMIT VISIBILITY OF COVERED PORTION OF ARRAY DAY OR NIGHT. COVERS SHALL BE SECURELY HELD IN PLACE BY RATCHETING LASHING STRAPS, NO TAPE OR ADHESIVES WILL BE PERMITTED. SEE PHASING PLANS FOR PLACEMENT OF SIGN COVERS.
6. COVER EXISTING ELEVATED EDGE LIGHT FIXTURES IN CLOSED AREA BARRICADED FOR CONSTRUCTION WITH 4" PVC PIPE. COVER SHALL EXTEND 2" MIN. ABOVE TOP OF FIXTURE.
7. PROVIDE ANY TEMPORARY AIRFIELD CIRCUIT JUMPERS REQUIRED TO MAINTAIN OPERATION OF ALL CIRCUITS AFFECTED BY CONSTRUCTION PRIOR TO START OF DEMOLITION. TEMPORARY CIRCUIT JUMPERS SHALL BE SLEEVED IN 2" CONDUIT, SANDBAGGED OR SECURED TO LOW-LEVEL BARRICADES. TEMPORARY CIRCUIT JUMPERS MAY BE ROUTED THROUGH NEW TAXIWAY CROSSINGS OR EXISTING SPARE CONDUITS AS REQUIRED AND SHALL BE COMPLETELY REMOVED WHEN NO LONGER REQUIRED FOR OPERATION. TEMPORARY JUMPER PLACEMENT SHALL NOT AFFECT AIRCRAFT MOVEMENT OR AIRPORT OPERATIONS.
8. UNCOVER SIGNS AND EDGE LIGHT FIXTURES, REMOVE TEMPORARY JUMPERS, AND VERIFY OPERATION AT THE END OF PROJECT.

ELECTRICAL GENERAL NOTES

1. GROUNDS RODS AND COUNTERPOISE WIRE ARE CONSIDERED INCIDENTAL TO FIXTURE AND CONDUIT INSTALLATION.
2. ELECTRICAL CONTRACTOR SHALL COORDINATE ALL DEMOLITION AND CONSTRUCTION WITH CIVIL CONTRACTOR TO REDUCE CONFLICTS THAT AFFECT CONSTRUCTION PHASING AND SCHEDULING.
3. CONTRACTOR SHALL FIELD VERIFY ALL FIXTURE STATION AND OFFSETS AND CONFIRM ALL LOCATIONS ARE WITHIN SPECIFICATION TOLERANCES.

CR engineers
16719 East Palisades Blvd., Suite 202
Fountain Hills, AZ 85268
Phone: (480) 816-5541
Fax: (480) 816-5540

C&S COMPANIES

Registered Professional Engineer (Electrical) CERTIFICATE NO. 36696 CATHERINE M. ALCORN Date Signed 5-6-22 ARIZONA U.S.A.

NO.	REVISIONS / SUBMISSIONS	DATE

PHX CITY OF PHOENIX AVIATION DEPARTMENT

PHOENIX GOODYEAR AIRPORT
NEW APRON AND TAXIWAY CONNECTOR

AV41000077 FAA/ADOT

CIP NO.(S): AV41000077 FAA/ADOT

Designed by: SW
Drawn by: JCA
Checked by: CA
Date: May 2022
Dwg scale:

Sheet Overview Title: ELECTRICAL NOTES

Sheet Reference Number: E-102

PER CITY OF PHOENIX CODE CHAPTER 2, SECTION 2-28. THESE PLANS ARE FOR OFFICIAL USE ONLY AND MAY NOT BE SHARED WITH OTHERS EXCEPT AS REQUIRED TO FULFILL THE OBLIGATIONS OF CONTRACTOR'S CONTRACT WITH THE CITY OF PHOENIX.

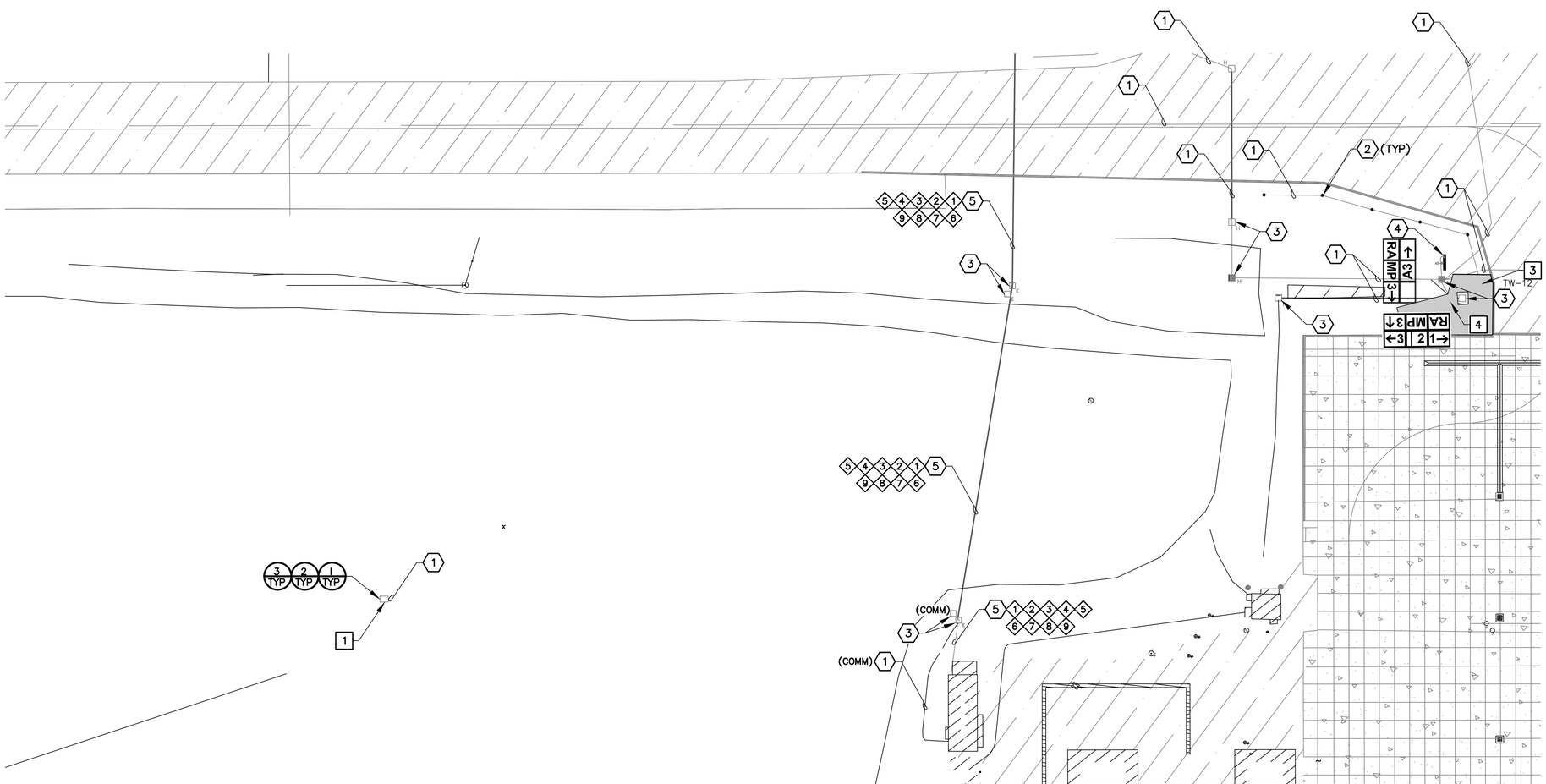

1 TYP EXISTING SWS EQUIPMENT
FACING NORTH WEST

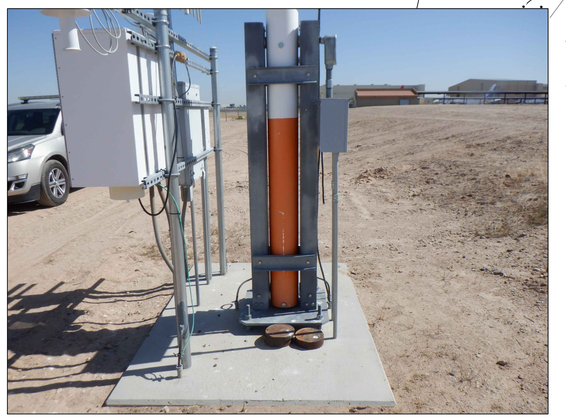

2 TYP EXISTING SWS EQUIPMENT
FACING NORTH EAST

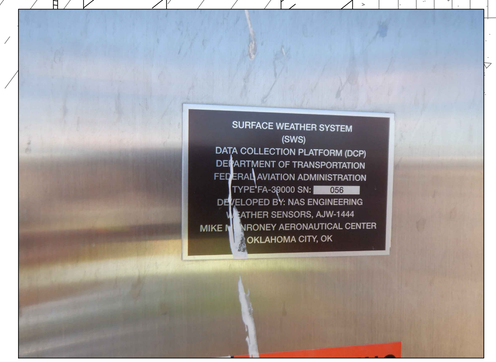

3 TYP EXISTING SWS NAMEPLATE

0 50' 100'
SCALE:1"=50'

REMOVAL NOTES

1. REMOVE AND SALVAGE EXISTING FAA SWS EQUIPMENT FOR RECONNECTION. DEMOLISH 4' THICK CONCRETE FOUNDATION. REMOVE CABLE BACK TO SWS SHELTER PANEL. SCHEDULED OUTAGES OF SWS SYSTEM MUST BE COORDINATED THRU AIRPORT AND FAA. (1 LUMP SUM)
3. REMOVE AND SALVAGE EXISTING ELEVATED EDGE LIGHT FOR RE-INSTALLATION. INSTALL NEW BLANK COVER AND GASKET ON EXISTING L-867 BASE CAN. (1 TOTAL)
4. REMOVE, TEMPORARILY MOUNT AND POWER AIRFIELD GUIDANCE SIGN AND ISOLATION TRANSFORMER. DEMO BASE CAN. (1 TOTAL)

REFERENCE NOTES

1. EXISTING CONDUIT AND CONDUCTOR TO REMAIN FOR RECONNECTION – PROTECT IN PLACE.
2. EXISTING TAXIWAY EDGE LIGHT AND ISOLATION TRANSFORMER TO REMAIN – PROTECT IN PLACE.
3. EXISTING HANDHOLE TO REMAIN – PROTECT IN PLACE
4. EXISTING AIRFIELD GUIDANCE SIGN TO REMAIN – PROTECT IN PLACE.
5. EXISTING 24-2" AIRFIELD LIGHTING DUCTBANK AND CABLES TO REMAIN – PROTECT IN PLACE.

CIRCUIT IDENTIFICATION

(5 KV)

1. RW 3-21
2. RGL
3. SIGNS (SG)
4. TWA NORTH (TAN)
5. TWA SOUTH (TAS)

(480V NAVAIDS)

6. NORTH PAPI (21)
7. NORTH REIL (21)
8. SOUTH PAPI (3)
9. SOUTH REIL (3)

PER CITY OF PHOENIX CODE CHAPTER 2, SECTION 2-28. THESE PLANS ARE FOR OFFICIAL USE ONLY AND MAY NOT BE SHARED WITH OTHERS EXCEPT AS REQUIRED TO FULFILL THE OBLIGATIONS OF YOUR CONTRACT WITH THE CITY OF PHOENIX.

PER CITY OF PHOENIX CODE CHAPTER 2, SECTION 2-28. THESE PLANS ARE FOR OFFICIAL USE ONLY AND MAY NOT BE SHARED WITH OTHERS EXCEPT AS REQUIRED TO FULFILL THE OBLIGATIONS OF CONTRACTOR'S CONTRACT WITH THE CITY OF PHOENIX.

CR engineers
16719 East Palisades Blvd., Suite 202
Fountain Hills, AZ 85268
Phone: (480) 816-5541
Fax: (480) 816-5540

C&S COMPANIES

Registered Professional Engineer (Electrical) CERTIFICATE NO. 36696 CATHERINE M. ALCORN Date Signed 04-04-22

NO.	REVISIONS / SUBMISSIONS	DATE

PHX DVT
CITY OF PHOENIX AVIATION DEPARTMENT
PHOENIX GOODYEAR AIRPORT
NEW APRON AND TAXIWAY CONNECTOR
AV41000077 FAA/ADOT

Designed by: SW
Drawn by: JBW
Checked by: CA
Date: May 2022
Dwg scale:

CIP NO.(S): AV41000077 FAA/ADOT

Sheet Overview Title
AIRFIELD ELECTRICAL
DEMOLITION SITE PLAN

Sheet Reference Number:
ED-101

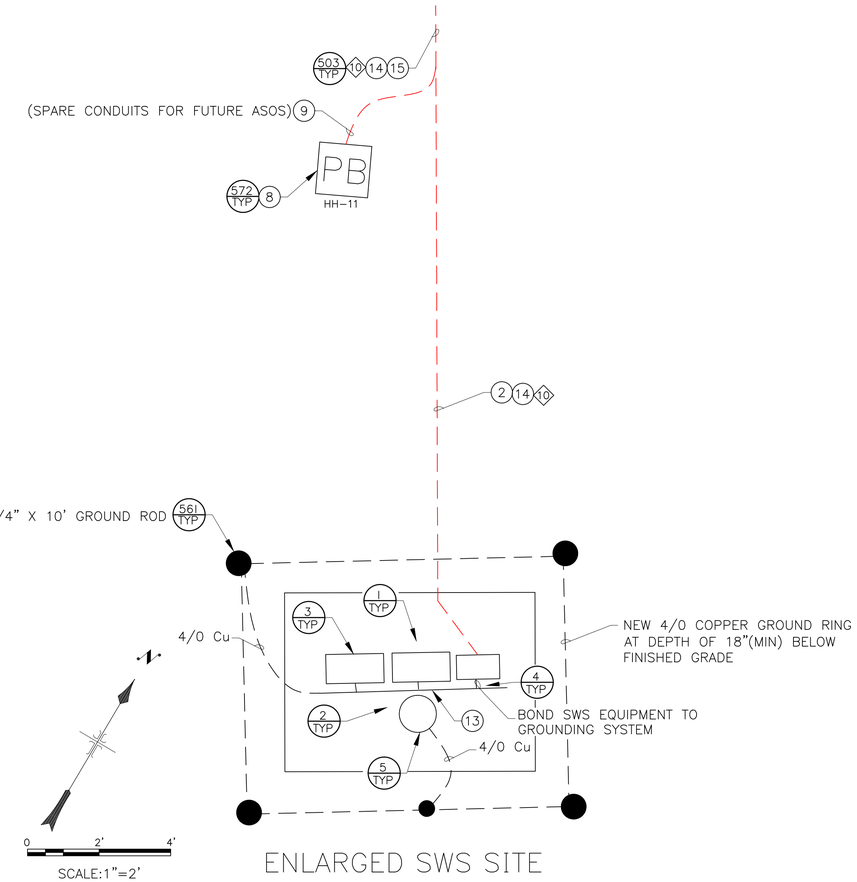

ENLARGED SWS SITE

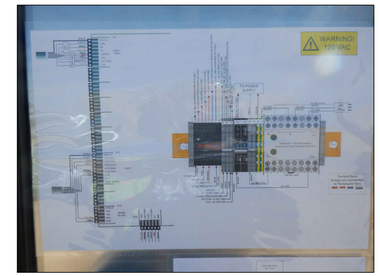

7 TYP SWS EQUIPMENT

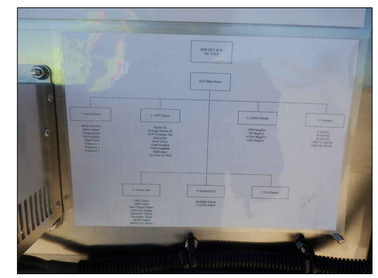

6 TYP SWS EQUIPMENT

1 TYP SWS EQUIPMENT

2 TYP SWS EQUIPMENT

3 TYP SWS COMMUNICATIONS BOX

4 TYP OVERALL SWS

5 TYP SWS EQUIPMENT

NOTE:
CONTRACTOR SHALL RELOCATE EXISTING SWS EQUIPMENT AND REINSTALL ON NEW 4' THICK CONCRETE FOUNDATION TO MATCH EXISTING SWS CONFIGURATION AND CONNECTIONS. PROVIDE GROUNDING AND BONDING OF SWS EQUIPMENT AS REQUIRED BY FAA.

CONSTRUCTION NOTES

2. 1-2"C SE (15 LF)
8. NEW SIZE 5 JUNCTION BOX FOR TERMINATING FUTURE ASOS AND SPARE CONDUITS (1 TOTAL)
9. 4-2"C SE (15 LF)
13. INSTALL SALVAGED FAA SWS EQUIPMENT ON NEW 4' THICK CONCRETE FOUNDATION WITH GROUNDING AND BONDING AS REQUIRED BY FAA. EXISTING ANTENNA SHALL BE MOUNTED AT HIGHER LOCATION ON TOWER TO BE DETERMINED BY FAA. (1 LUMP SUM)
14. 3 – 4/0, 4/0 GND (60 LF)
15. 5-2"C SE (5 LF)

REFERENCE NOTES

CIRCUIT IDENTIFICATION

10. CKT SWS-9,11

CR engineers
16719 East Palisades Blvd., Suite 202
Fountain Hills, AZ 85268
Phone: (480) 816-5541
Fax: (480) 816-5540

PER CITY OF PHOENIX CODE CHAPTER 2, SECTION 2-28. THESE PLANS ARE FOR OFFICIAL USE ONLY AND MAY NOT BE SHARED WITH OTHERS EXCEPT AS REQUIRED TO FULFILL THE OBLIGATIONS OF YOUR CONTRACT WITH THE CITY OF PHOENIX.

C&S COMPANIES

Registered Professional Engineer (Electrical) CERTIFICATE NO. 36696 CATHERINE M. ALCORN Date Signed 04-04-22 ARIZONA U.S.A.

NO.	REVISIONS / SUBMISSIONS	DATE

PHX DVT CYR
CITY OF PHOENIX AVIATION DEPARTMENT
PHOENIX GOODYEAR AIRPORT
NEW APRON AND TAXIWAY CONNECTOR
AV41000077 FAA/ADOT

Designed by: SW
Drawn by: JBW
Checked by: CA
Date: May 2022
Dwg scale:

CIP NO.(S): AV41000077 FAA/ADOT

Sheet Overview Title
AIRFIELD ELECTRICAL INSTALLATION SITE PLAN

Sheet Reference Number:
EA-101

PER CITY OF PHOENIX CODE CHAPTER 2, SECTION 2-28. THESE PLANS ARE FOR OFFICIAL USE ONLY AND MAY NOT BE SHARED WITH OTHERS EXCEPT AS REQUIRED TO FULFILL THE OBLIGATIONS OF CONTRACTOR'S CONTRACT WITH THE CITY OF PHOENIX.

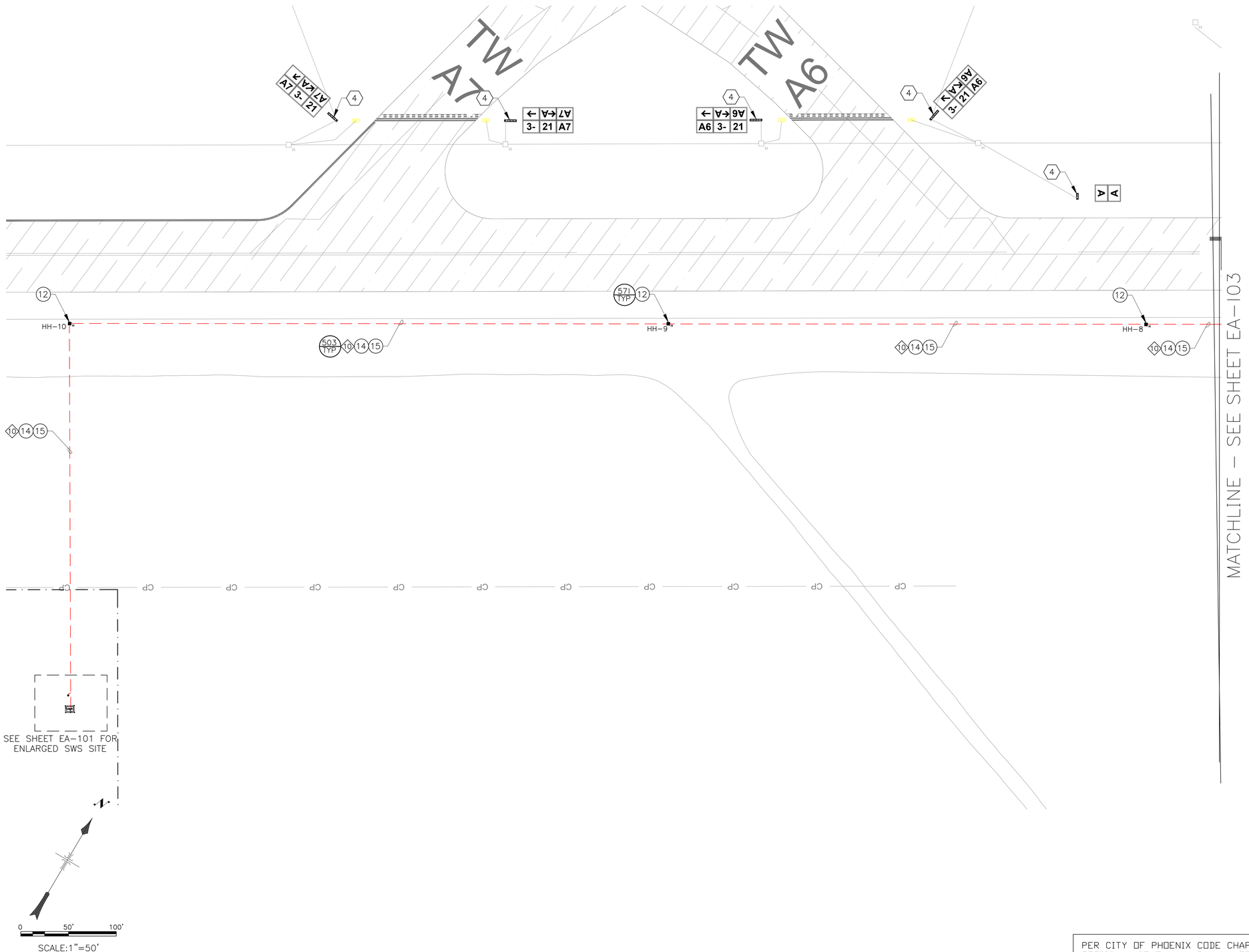

CONSTRUCTION NOTES

12 NEW 2' X 2' X 3' HANDHOLE, TYPE 1, AIRCRAFT RATED. (3 TOTAL)

14 3 – 4/0, 4/0 GND (1650 LF)

15 5–2"C SE (1595 LF)

REFERENCE NOTES

4 EXISTING AIRFIELD GUIDANCE SIGN

CIRCUIT IDENTIFICATION

10 CKT SWS–9,11

CR engineers
16719 East Palisades Blvd., Suite 202
Fountain Hills, AZ 85268
Phone: (480) 816-5541
Fax: (480) 816-5540

PER CITY OF PHOENIX CODE CHAPTER 2, SECTION 2-28. THESE PLANS ARE FOR OFFICIAL USE ONLY AND MAY NOT BE SHARED WITH OTHERS EXCEPT AS REQUIRED TO FULFILL THE OBLIGATIONS OF CONTRACTOR'S CONTRACT WITH THE CITY OF PHOENIX.

C&S COMPANIES

Registered Professional Engineer (Electrical) CERTIFICATE NO. 36696 CATHERINE M. ALCORN Date Signed 04-04-22 ARIZONA U.S.A.

PER CITY OF PHOENIX CODE CHAPTER 2, SECTION 2-28. THESE PLANS ARE FOR OFFICIAL USE ONLY AND MAY NOT BE SHARED WITH OTHERS EXCEPT AS REQUIRED TO FULFILL THE OBLIGATIONS OF YOUR CONTRACT WITH THE CITY OF PHOENIX.

NO.	REVISIONS / SUBMISSIONS	DATE

PHX INT'L CYR
CITY OF PHOENIX AVIATION DEPARTMENT

PHOENIX GOODYEAR AIRPORT
NEW APRON AND TAXIWAY CONNECTOR
AV41000077 FAA/ADOT

Designed by: SW
Drawn by: JBW
Checked by: CA
Date: May 2022
Dwg scale:

CIP NO.(S): AV41000077 FAA/ADOT

Sheet Overview Title

AIRFIELD ELECTRICAL INSTALLATION SITE PLAN

Sheet Reference Number:

EA-102

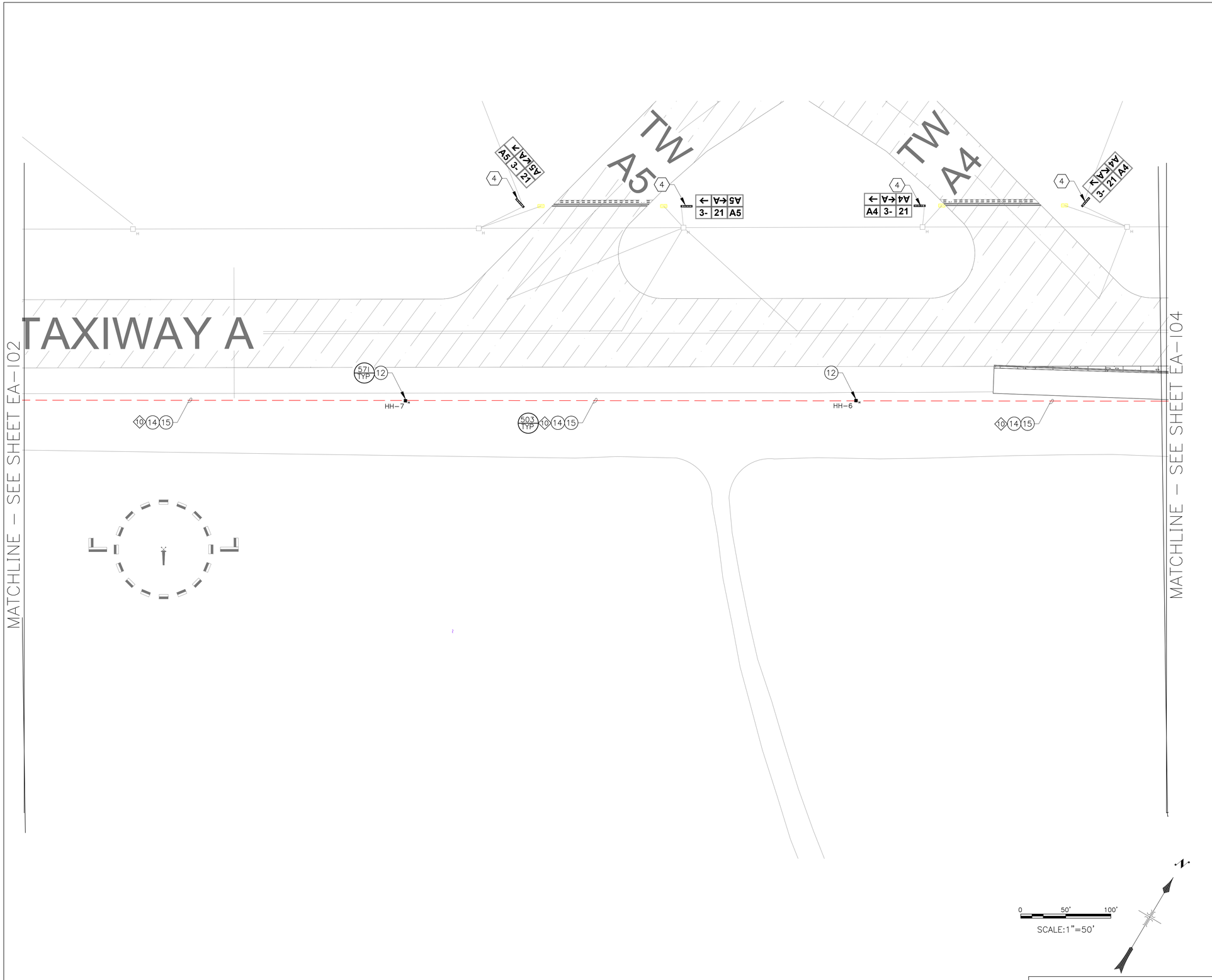

CONSTRUCTION NOTES

(12) NEW 2' X 2' X 3' HANDHOLE, TYPE 1, AIRCRAFT RATED. (2 TOTAL)

(14) 3 – 4/0, 4/0 GND (1320 LF)

(15) 5–2"C SE (1280 LF)

REFERENCE NOTES

(4) EXISTING AIRFIELD GUIDANCE SIGN

CIRCUIT IDENTIFICATION

(10) CKT SWS–9,11

CR engineers
16719 East Palisades Blvd., Suite 202
Fountain Hills, AZ 85268
Phone: (480) 816-5541
Fax: (480) 816-5540

PER CITY OF PHOENIX CODE CHAPTER 2, SECTION 2-28. THESE PLANS ARE FOR OFFICIAL USE ONLY AND MAY NOT BE SHARED WITH OTHERS EXCEPT AS REQUIRED TO FULFILL THE OBLIGATIONS OF YOUR CONTRACT WITH THE CITY OF PHOENIX.

C&S COMPANIES

Registered Professional Engineer (Electrical) CERTIFICATE NO. 36696 CATHERINE M. ALCORN Date Signed 04-04-22 ARIZONA, U.S.A.

NO.	REVISIONS / SUBMISSIONS	DATE

PHX DVT CYR
CITY OF PHOENIX AVIATION DEPARTMENT
PHOENIX GOODYEAR AIRPORT
NEW APRON AND TAXIWAY CONNECTOR
AV41000077 FAA/ADOT

Designed by: SW
Drawn by: JBW
Checked by: CA
Date: May 2022
Dwg scale:

CIP NO.(S): AV41000077 FAA/ADOT

Sheet Overview Title
AIRFIELD ELECTRICAL INSTALLATION SITE PLAN

Sheet Reference Number:
EA-103

PER CITY OF PHOENIX CODE CHAPTER 2, SECTION 2-28. THESE PLANS ARE FOR OFFICIAL USE ONLY AND MAY NOT BE SHARED WITH OTHERS EXCEPT AS REQUIRED TO FULFILL THE OBLIGATIONS OF CONTRACTOR'S CONTRACT WITH THE CITY OF PHOENIX.

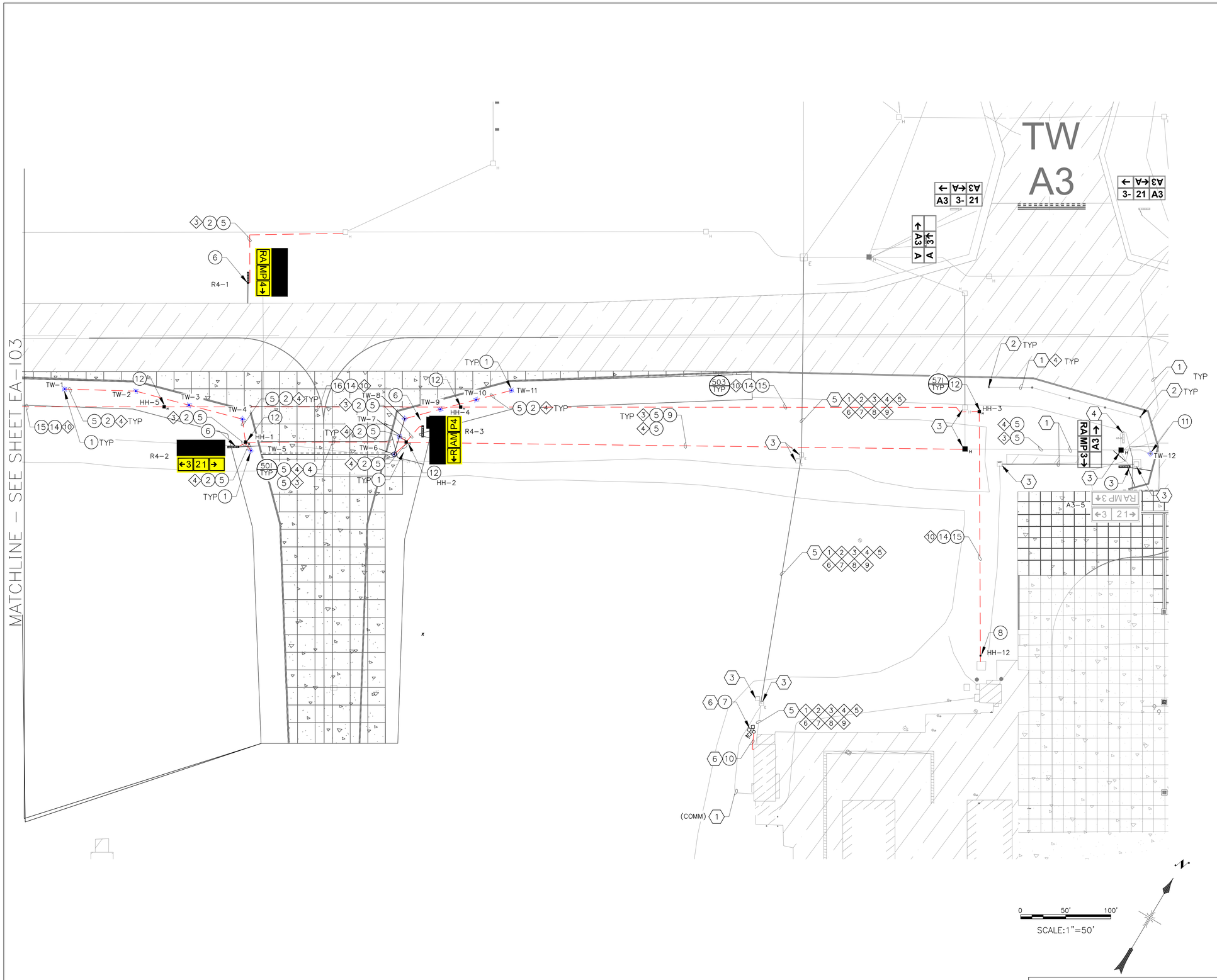

CONSTRUCTION NOTES

1. INSTALL NEW ELEVATED LED L–861T(L) TAXIWAY EDGE LIGHT AND ISOLATION TRANSFORMER ON NEW L–867 BASE CAN. (11 TOTAL)
2. 1–2"C SE (665 LF)
3. INSTALL SALVAGED 3 MODULE AIRFIELD GUIDANCE SIGN ON NEW SIGN BASE. (1 TOTAL)
4. 4–2"C CE (205 LF)
5. NEW 2/C, #8 5KV L–824, TYPE "C" AIRFIELD LIGHTING CABLE. (2880 LF)
6. NEW L–858(L) LED SIZE 2, 3 MODULE AIRFIELD GUIDANCE SIGN AND ISOLATION TRANSFORMER ON NEW SIGN BASE. (3 TOTAL)
7. NEW 70' APRON LIGHTING POLE WITH 3–900W FIXTURES AND OBSTRUCTION LIGHT ON CONCRETE FOUNDATION. BID ALT #1 (1 TOTAL)
8. NEW SIZE 5 JUNCTION BOX FOR TERMINATING FUTURE ASOS AND SPARE CONDUITS (1 TOTAL)
9. 4–2"C SE (645 LF)
10. 2–#10, #10 NEUTRAL, #10 GND, 1"C (CKT A–40,42 – APRON LIGHT) BID ALT #1 (50 LF)
11. REMOVE BASE CAN PLATE AND INSTALL SALVAGED ELEVATED TAXIWAY EDGE LIGHT ON EXISTING BASE CAN. (1 TOTAL)
12. NEW 2' X 2' X 3' HANDHOLE, TYPE 1, AIRCRAFT RATED. (5 TOTAL)
14. 3 – 4/0, 4/0 GND (1142 LF)
15. 5–2"C SE (1055 LF)
16. 5–2"C CE (325 LF)

REFERENCE NOTES

1. EXISTING CONDUIT AND CONDUCTOR
2. EXISTING TAXIWAY EDGE LIGHT AND ISOLATION TRANSFORMER
3. EXISTING HANDHOLE
4. EXISTING AIRFIELD GUIDANCE SIGN
5. EXISTING 24–2" AIRFIELD LIGHTING DUCTBANK AND CABLES TO REMAIN – PROTECT IN PLACE.
6. BID ALT #1

CIRCUIT IDENTIFICATION

(5 KV)

1. RW 3–21
2. RGL
3. SIGNS (SG)
4. TWA NORTH (TAN)
5. TWA SOUTH (TAS)

(480V NAVAIDS)

6. NORTH PAPI (21)
7. NORTH REIL (21)
8. SOUTH PAPI (3)
9. SOUTH REIL (3)
10. CKT SWS – 9,11

CR engineers
16719 East Palisades Blvd., Suite 202
Fountain Hills, AZ 85268
Phone: (480) 816-5541
Fax: (480) 816-5540

PER CITY OF PHOENIX CODE CHAPTER 2, SECTION 2-28. THESE PLANS ARE FOR OFFICIAL USE ONLY AND MAY NOT BE SHARED WITH OTHERS EXCEPT AS REQUIRED TO FULFILL THE OBLIGATIONS OF YOUR CONTRACT WITH THE CITY OF PHOENIX.

C&S COMPANIES

Registered Professional Engineer (Electrical) CERTIFICATE NO. 36696 CATHERINE M. ALCORN Date Signed 04-04-22 ARIZONA U.S.A.

NO.	REVISIONS / SUBMISSIONS	DATE

PER CITY OF PHOENIX CODE CHAPTER 2, SECTION 2-28. THESE PLANS ARE FOR OFFICIAL USE ONLY AND MAY NOT BE SHARED WITH OTHERS EXCEPT AS REQUIRED TO FULFILL THE OBLIGATIONS OF YOUR CONTRACT WITH THE CITY OF PHOENIX.

PHX CITY OF PHOENIX AVIATION DEPARTMENT

PHOENIX GOODYEAR AIRPORT
NEW APRON AND TAXIWAY CONNECTOR

AV41000077 FAA/ADOT

Designed by: SW
Drawn by: JBW
Checked by: CA
Date: May 2022
Dwg scale:

CIP NO.(S): AV41000077 FAA/ADOT

Sheet Overview Title

AIRFIELD ELECTRICAL INSTALLATION SITE PLAN

Sheet Reference Number:

EA-104

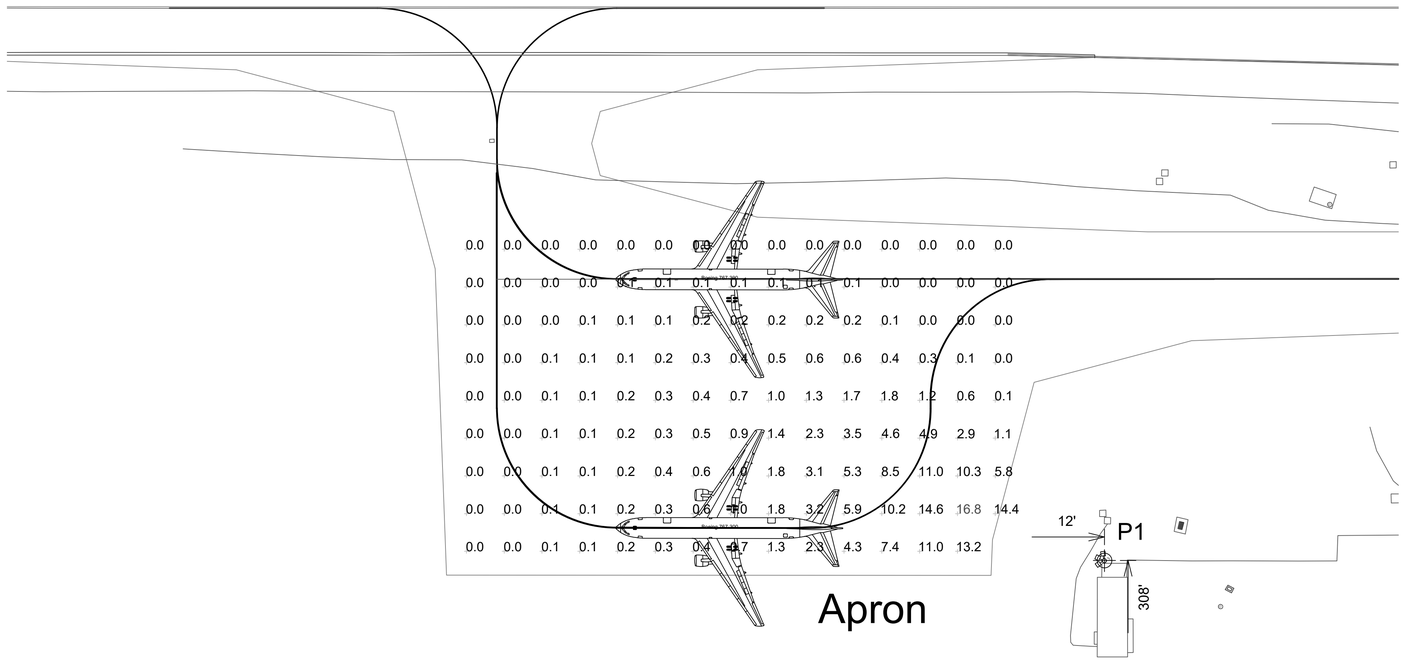

Name: Apron
Size: 0' x 0'
Spacing: 30.0' x 30.0'
Height: 0.0' above grade

MAINTAINED HORIZONTAL FOOTCANDLES

Scan Average: 1.47
Maximum: 16.78
Minimum: 0.00
Avg / Min: 13971.69
Max / Min: 158947.58
UG (adjacent pts): 13.26
CU: 0.69
No. of Points: 134

LUMINAIRE INFORMATION

Color / CRI: 5700K - 75 CRI
Luminaire Output: 76,160 lumens
Design Usage Hours: 100,000
No. of Luminaires: 3
Avg Load: 2.4 kW
Max Load: 2.67 kW

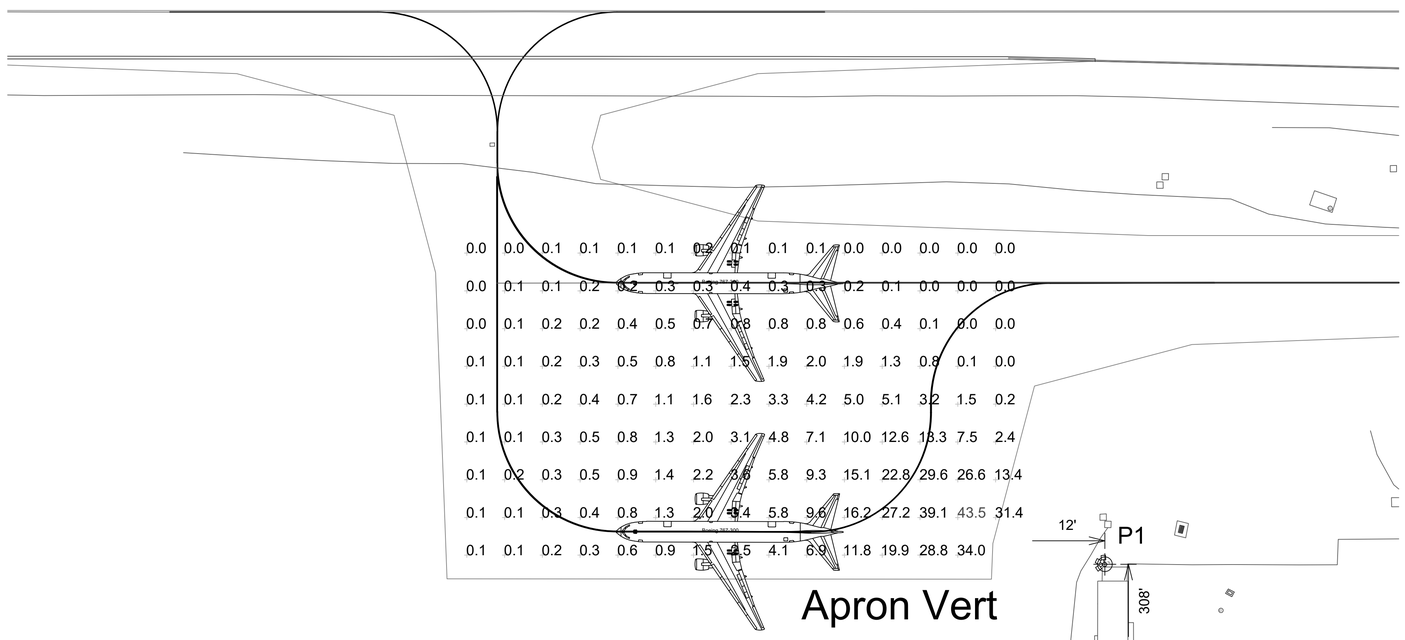

Size: 0' x 0'
Spacing: 30.0' x 30.0'
Height: 6.6' above grade

MAINTAINED MAX VERTICAL FOOTCANDLES

Scan Average: 4.04
Maximum: 43.46
Minimum: 0.00
Avg / Min: 30036.35
Max / Min: 323357.88
UG (adjacent pts): 13.67
CU: 0.66
No. of Points: 134

LUMINAIRE INFORMATION

Color / CRI: 5700K - 75 CRI
Luminaire Output: 76,160 lumens
Design Usage Hours: 100,000
No. of Luminaires: 3
Avg Load: 2.4 kW
Max Load: 2.67 kW

Pole				Luminaires				
QTY	LOCATION	SIZE	GRADE ELEVATION	MOUNTING HEIGHT	LUMINAIRE TYPE	QTY / POLE	THIS GRID	OTHER GRIDS
1	P1	70'	-	70'	TLC-LED-900	3	3	0
1	TOTALS					3	3	0

CR engineers
16719 East Palisades Blvd., Suite 202
Fountain Hills, AZ 85268
Phone: (480) 816-5541
Fax: (480) 816-5540

PER CITY OF PHOENIX CODE CHAPTER 2, SECTION 2-28. THESE PLANS ARE FOR OFFICIAL USE ONLY AND MAY NOT BE SHARED WITH OTHERS EXCEPT AS REQUIRED TO FULFILL THE OBLIGATIONS OF YOUR CONTRACT WITH THE CITY OF PHOENIX.

C&S COMPANIES

Registered Professional Engineer (Electrical) CERTIFICATE NO. 36696 CATHERINE M. ALCORN Date Signed 04-04-22 Arizona U.S.A.

PER CITY OF PHOENIX CODE CHAPTER 2, SECTION 2-28. THESE PLANS ARE FOR OFFICIAL USE ONLY AND MAY NOT BE SHARED WITH OTHERS EXCEPT AS REQUIRED TO FULFILL THE OBLIGATIONS OF YOUR CONTRACT WITH THE CITY OF PHOENIX.

NO.	REVISIONS / SUBMISSIONS	DATE

PHX CITY OF PHOENIX AVIATION DEPARTMENT

PHOENIX GOODYEAR AIRPORT
NEW APRON AND TAXIWAY CONNECTOR

AV41000077 FAA/ADOT

Designed by: SW
Drawn by: JBW
Checked by: CA
Date: May 2022
Dwg scale:

CIP NO.(S): AV41000077 FAA/ADOT

Sheet Overview Title

APRON LIGHT PHOTOMETRICS
(BID ALT #1)

Sheet Reference Number:

EA-401

PER CITY OF PHOENIX CODE CHAPTER 2, SECTION 2-28. THESE PLANS ARE FOR OFFICIAL USE ONLY AND MAY NOT BE SHARED WITH OTHERS EXCEPT AS REQUIRED TO FULFILL THE OBLIGATIONS OF CONTRACTOR'S CONTRACT WITH THE CITY OF PHOENIX.

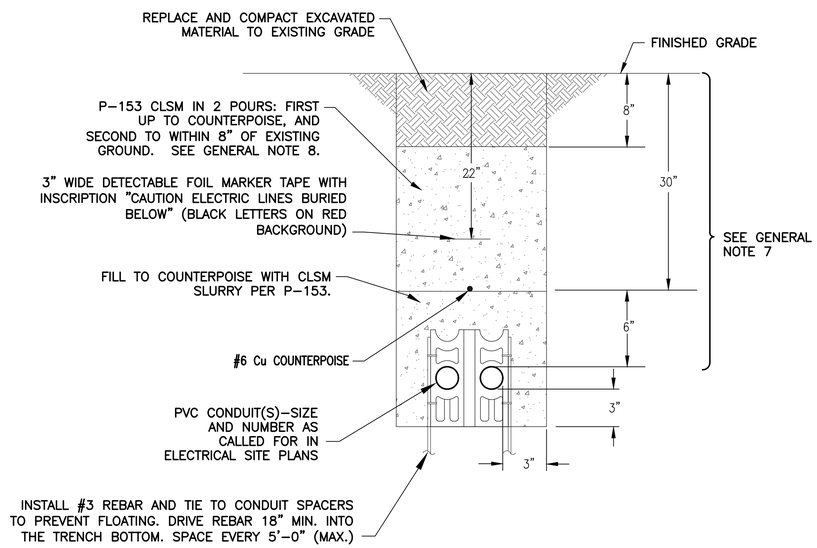

ALL DIMENSIONS ARE MINIMUM

503 TYP SLURRY ENCASED (SE) CONDUIT DUCTBANK

GENERAL NOTES FOR CONDUIT INSTALLATION

1. PROVIDE PULL STRING IN ALL (NEW) UNUSED CONDUITS. PLUG ENDS IN HANDHOLES.
2. P-610 CONCRETE ENCASE UNDER PAVEMENT AND AS OTHERWISE INDICATED ON PLANS.
3. INSTALL A #6 BARE COPPER (Cu) COUNTERPOISE IN EACH DUCT ASSEMBLY FROM HANDHOLE-TO-HANDHOLE AND EXOTHERMICALLY WELD TO GROUND RODS AT EACH HANDHOLE.
4. INSTALL LIGHTING SERIES CIRCUITS AS FOLLOWS:
   A. ONE CIRCUIT (1 OR 2 CONDUCTORS) PER 2"C. LIMIT 4"C TO NO MORE THAN (8) CONDUCTORS.
   B. START INSTALLATION IN BOTTOM CONDUITS OF DUCT ARRAY, LEAVING THE UPPER CONDUITS EMPTY.
5. ALL UNDERGROUND CONDUITS SHALL MAINTAIN A 12" (MIN.) SEPARATION FROM ALL OTHER (EXISTING OR NEW) UNDERGROUND FACILITIES (i.e. water, sewer, and gas lines, including both public and private), UNLESS NOTED OTHERWISE ON DRAWINGS
6. CONDUIT IN DUCTBANK(S) ARE TO BE STACKED NO MORE THAN TWO (2) CONDUITS. IF MORE CONDUITS ARE NEEDED, THE WIDTH OF THE TRENCH IS TO BE INCREASED.
7. ADJUST DEPTH TO 18-24"" TOTAL FOR CONDUIT INSTALLATION BETWEEN OR INTO L-867/L-868 BASE CAN. INSTALL COUNTERPOISE AT 12" BELOW GRADE FOR THESE SECTIONS.
8. BENEATH PAVE SURFACES, CONDUIT SHALL BE INCASED WITH P-610 STRUCTURAL PORTLAND CEMENT CONCRETE. TRENCHES SHALL BE BACKFILLED WITH P-153 CLSM UP TO THE BOTTOM OF THE P-401 OR P-501 PAVEMENT LAYER. REFER TO CIVIL SHEET C-501 FOR PROPOSED PAVEMENT SECTION THICKNESSES. BENEATH INFIELD AREAS, CONDUIT SHALL BE ENCASED WITH P-153 CLSM AND THE TRENCH BACKFILLED WITH CLSM UP TO THE LAST EIGHT (8) INCHES. THE TOP EIGHT (8) INCHES OF MATERIAL SHALL BE COMPACTED NATIVE SOIL.

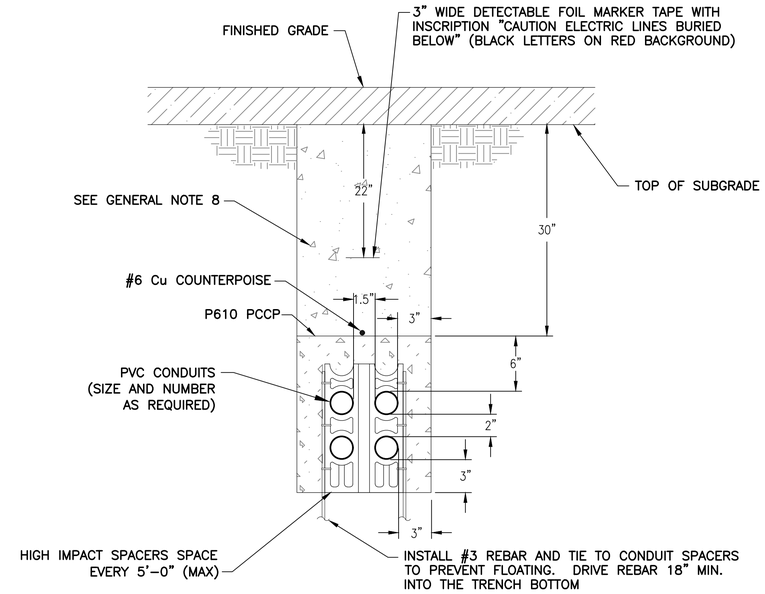

ALL DIMENSIONS ARE MINIMUM

501 TYP CONCRETE ENCASED (CE) CONDUIT DUCTBANK

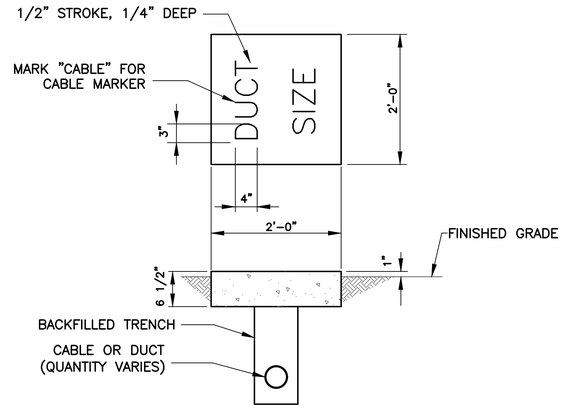

663 TYP CABLE/DUCT MARKER

NOTES

1. LOCATE THE MARKERS ABOVE THE ENDS OF ALL DUCTS OR DUCT BANKS, EXCEPT WHERE DUCTS TERMINATE IN THE HANDHOLE, MANHOLE, OR BUILDING. THE WORD "DUCT" MUST BE IMPRESSED ON EACH MARKER SLAB, AS WELL AS THE NUMBER AND SIZE OF DUCTS BENEATH THE MARKER.
2. COST OF CONCRETE MARKERS IS INCIDENTAL TO THE ASSOCIATED ITEMS OF DUCTS

CR engineers
16719 East Palisades Blvd., Suite 202
Fountain Hills, AZ 85268
Phone: (480) 816-5541
Fax: (480) 816-5540

PER CITY OF PHOENIX CODE CHAPTER 2, SECTION 2-28. THESE PLANS ARE FOR OFFICIAL USE ONLY AND MAY NOT BE SHARED WITH OTHERS EXCEPT AS REQUIRED TO FULFILL THE OBLIGATIONS OF YOUR CONTRACT WITH THE CITY OF PHOENIX.

NO.	REVISIONS / SUBMISSIONS	DATE

PHX DVT CYR
CITY OF PHOENIX AVIATION DEPARTMENT
PHOENIX GOODYEAR AIRPORT
NEW APRON AND TAXIWAY CONNECTOR
AV41000077 FAA/ADOT

Designed by: SW
Drawn by: JBW
Checked by: CA
Date: May 2022
Dwg. scale:

CIP NO.(S): AV41000077 FAA/ADOT

Sheet Overview Title
ELECTRICAL DUCTBANK DETAILS

Sheet Reference Number:
EA-501

PER CITY OF PHOENIX CODE CHAPTER 2, SECTION 2-28. THESE PLANS ARE FOR OFFICIAL USE ONLY AND MAY NOT BE SHARED WITH OTHERS EXCEPT AS REQUIRED TO FULFILL THE OBLIGATIONS OF CONTRACTOR'S CONTRACT WITH THE CITY OF PHOENIX.

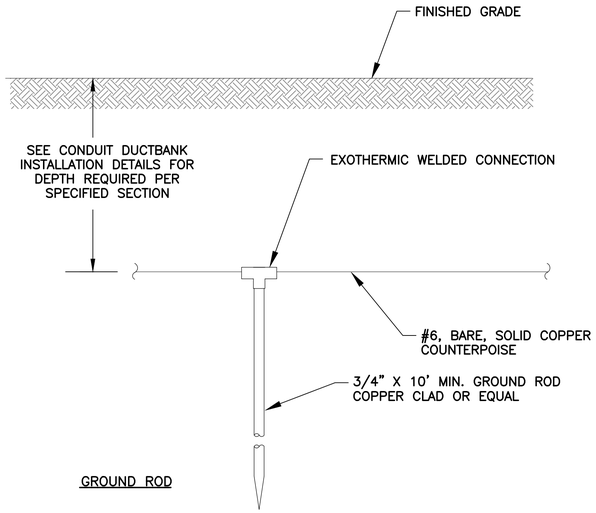

761 TYP COUNTERPOISE INSTALLATION DETAIL

NOTES

1. COST OF GROUND RODS SHALL BE INCIDENTAL TO THE ASSOCIATED ITEMS REQUIRING GROUNDING UNLESS OTHERWISE SPECIFIED.
2. WHERE POSSIBLE, NEW COUNTERPOISE SYSTEM SHALL BE CONNECTED TO ANY EXISTING COUNTERPOISE SYSTEM ENCOUNTERED.
3. GROUNDING ELECTRODES INSTALLED AS PART OF THE COUNTERPOISE SYSTEM SHALL BE SPACED AT DISTANCES NO GREATER THAN 500 FT. (MAX).
4. REFER TO DETAILS 501, SHEET EA-501, FOR CONCRETE ENCASED CONDUITS. REFER TO DETAIL 503, SHEET EA-501 FOR SLURRY ENCASED CONDUITS.
5. MAINTAIN SIX INCH (MINIMUM) VERTICAL SEPARATION BETWEEN COUNTERPOISE AND TYPE "C" CABLE IN 2" CONDUIT.
6. PROVIDE GROUND ROD FOR EXOTHERMICALLY WELDING TO COUNTERPOISE AT END OF SINGLE CONDUITS TERMINATING AT FIXTURE OR SIGN BASES IF DISTANCE IS GREATER THAN 100' FROM HANDHOLE OR LAST INSTALLED COUNTERPOISE ROD.

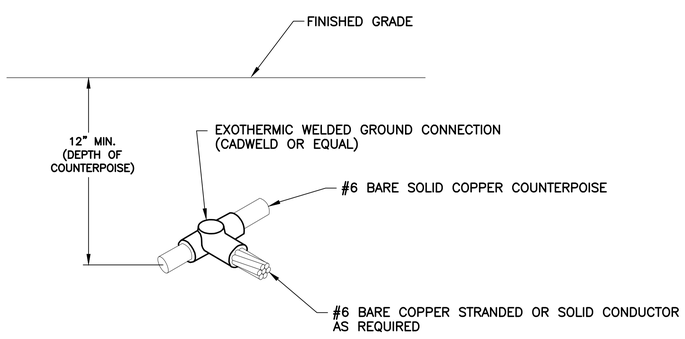

766 TYP COUNTERPOISE TO CABLE CONNECTION DETAIL

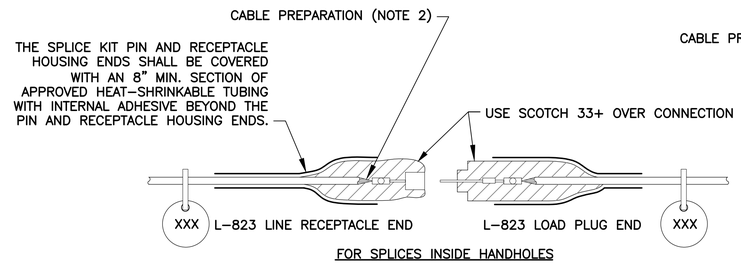

FOR SPLICES INSIDE HANDHOLES

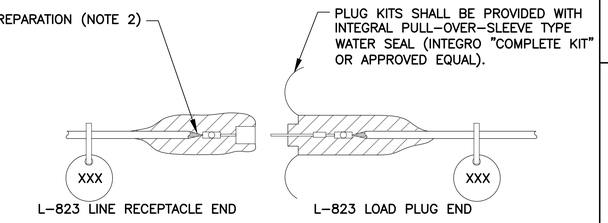

FOR SPLICES INSIDE CANS

NOTES

1. PROVIDE MALE AND FEMALE L-823 CONNECTORS AS REQUIRED ON EACH CONDUCTOR IN EACH BASE, HANDHOLE, OR MANHOLE TO ALLOW ISOLATION OF HOMERUN CIRCUIT, NO STRAIGHT-THROUGH ALLOWED.
2. ALL CABLE ENDS SHALL BE PREPARED WITH THE USE OF A TAPERING TOOL SPECIFICALLY DESIGNED FOR USE WITH L-824 CABLES.
3. PLUG AND RECEPTACLE END FITTINGS SHALL BE CRIMPED ONTO THE CONDUCTOR BY USE OF AN AIRPORT PERSONNEL ACCEPTED RATCHETING TYPE CRIMPING TOOL.
4. AT THE POINT OF CONNECTION WITH THE EXISTING FIELD CIRCUITS, INSTALL NEW L-823 PLUGS ON BOTH THE NEW AND EXISTING CABLES. VERIFY INSULATION TYPES OF BOTH NEW & EXISTING CABLES AND COORDINATE WITH TERMINATION KITS TO ASSURE PROPER AND WATERPROOF FIT.
5. INSTALL 33+VINYL-130C ELECTRICAL TAPE AND A SECOND LAYER OF RUBBER-33+VINYL ON CONNECTION AFTER PULLING SLEEVE OVER COMPLETE KIT.
6. THERE SHALL BE NO SPLICES BETWEEN LIGHTS, ONLY IN BASES OR HANDHOLES.
7. PROVIDE AND INSTALL NON-CONDUCTIVE CIRCUIT IDENTIFICATION TAGS ATTACHED TO EACH SIDE OF ALL CONNECTOR KITS.
8. ON THE CABLES FOR THE RUNWAY CIRCUIT, TAPE FROM THE BACK END OF THE CONNECTOR KIT ONTO CABLE FOR 3" EACH, RED PHASE TAPE FOR FASTER IDENTIFICATION AND MATCH EXISTING MANHOLE LAYOUTS.
9. ON THE CABLES FOR THE TAXIWAY AND SIGNAGE CIRCUITS, TAPE FROM THE BACK END OF THE CONNECTOR KIT ONTO CABLE FOR 3" EACH, BLUE THEN WHITE PHASE TAPE FOR SIGNS, BLUE ONLY PHASE TAPE FOR TAXIWAY EDGE LIGHTS, FOR FASTER IDENTIFICATION AND MATCH EXISTING MANHOLE LAYOUTS.

925 TYP TYPICAL 5KV CABLE SPLICE

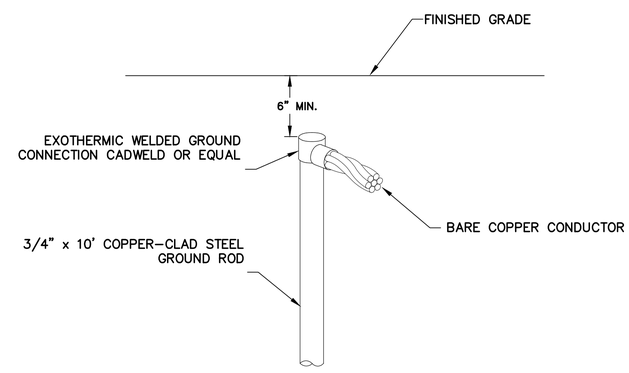

561 TYP CABLE TO GROUND ROD CONNECTION DETAIL

CR engineers
16719 East Palisades Blvd., Suite 202
Fountain Hills, AZ 85268
Phone: (480) 816-5541
Fax: (480) 816-5540

PER CITY OF PHOENIX CODE CHAPTER 2, SECTION 2-28. THESE PLANS ARE FOR OFFICIAL USE ONLY AND MAY NOT BE SHARED WITH OTHERS EXCEPT AS REQUIRED TO FULFILL THE OBLIGATIONS OF YOUR CONTRACT WITH THE CITY OF PHOENIX.

C&S COMPANIES

Registered Professional Engineer (Electrical) CERTIFICATE NO. 36696 CATHERINE M. ALCORN Date Signed 04-22-22 Expires 12-31-23

NO.	REVISIONS / SUBMISSIONS	DATE

PHX CITY OF PHOENIX AVIATION DEPARTMENT
PHOENIX GOODYEAR AIRPORT
NEW APRON AND TAXIWAY CONNECTOR
AV41000077 FAA/ADOT

Designed by: SW
Drawn by: JBW
Checked by: CA
Date: May 2022
Dwg scale:

CIP NO.(S): AV41000077 FAA/ADOT

Sheet Overview Title: GROUNDING DETAILS

Sheet Reference Number: EA-502

PER CITY OF PHOENIX CODE CHAPTER 2, SECTION 2-28. THESE PLANS ARE FOR OFFICIAL USE ONLY AND MAY NOT BE SHARED WITH OTHERS EXCEPT AS REQUIRED TO FULFILL THE OBLIGATIONS OF CONTRACTOR'S CONTRACT WITH THE CITY OF PHOENIX.

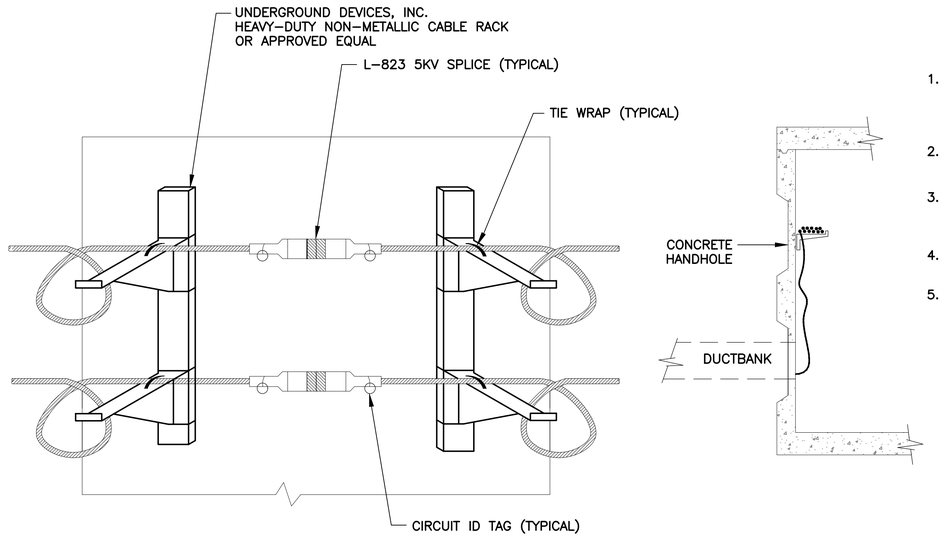

1. PROVIDE NON-METALLIC, NON-CONDUCTIVE, RACK ARMS, BOLTED TO CHANNELS INSET IN HANDHOLE WALLS. PROVIDE MIN. (2) ARMS FOR EVERY WALL.
2. CABLE RACKING SHALL BE LIMITED TO THE UPPER HALF OF THE HANDHOLE.
3. PROVIDE 2 CIRCUIT TAGS FOR EVERY L-823 CABLE SPLICE IN HANDHOLE WITHIN 24" OF SPLICE.
4. PROVIDE A MIN. OF TEN FEET OF CABLE BETWEEN ENTRY POINT AND L-823 SPLICE.
5. RACK CABLES ON SIDE(S) OF ENTRY/EXIT CONDUITS.
   a. DUCT/CONDUIT ARRAY SHALL ENTER HANDHOLE IN LOWER HALF OF THE HANDHOLE.
   b. PROVIDE BELL END FOR EVERY CONDUIT IN THE ARRAY.
   c. GROUT AROUND/BETWEEN CONDUITS & CONCRETE WALL.

C CABLE RACKING DETAIL

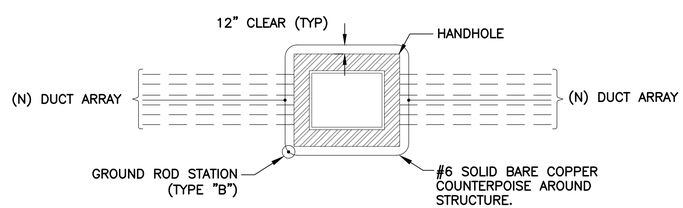

A HANDHOLE COUNTERPOISE DETAIL

NOTES:

ALL COUNTERPOISE WIRES FOR DUCTBANKS AND CONDUITS TO BE EXOTHERMICALLY WELDED TO COUNTERPOISE LOOP AROUND STRUCTURE

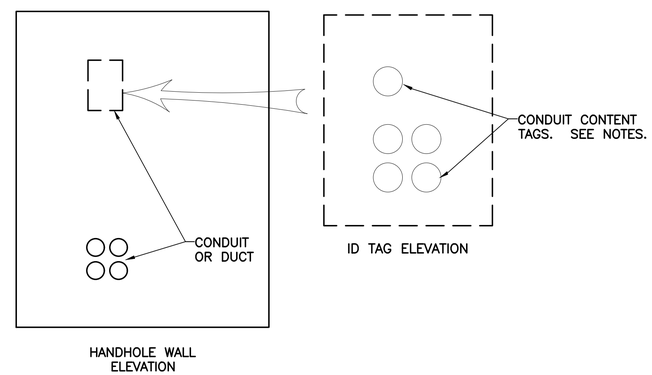

B CABLE ROUTING IDENTIFICATION TAG DETAIL

PLAQUE NOTES:

1. AFFIX ENGRAVED PHENOLIC TAGS TO THE WALL WITH SILICONE SEALANT ABOVE THE DUCT OR CONDUIT ENTRY IN A WAY THAT MIMICS THE ARRAY. WIRE BRUSH CONCRETE WALL TO ASSURE ADHESION.
2. THE TAGS SHALL BE APPROX 1"H x 2"L AND SHALL HAVE MINIMUM 1/4" LETTERING.

CR engineers
16719 East Palisades Blvd., Suite 202
Fountain Hills, AZ 85268
Phone: (480) 816-5541
Fax: (480) 816-5540

C&S COMPANIES

Registered Professional Engineer (Electrical) CERTIFICATE NO. 36696 CATHERINE M. ALCORN Date Signed 5-13-22 AZ U.S.A.

NO.	REVISIONS / SUBMISSIONS	DATE

PHX DVT CYR
CITY OF PHOENIX AVIATION DEPARTMENT
PHOENIX GOODYEAR AIRPORT
NEW APRON AND TAXIWAY CONNECTOR
AV41000077 FAA/ADOT

Designed by: SW
Drawn by: JCA
Checked by: CA
Date: May 2022
Dwg scale:

CIP NO.(S): AV41000077 FAA/ADOT

Sheet Overview Title
HANDHOLE DETAILS

Sheet Reference Number:
EA-503

PER CITY OF PHOENIX CODE CHAPTER 2, SECTION 2-28. THESE PLANS ARE FOR OFFICIAL USE ONLY AND MAY NOT BE SHARED WITH OTHERS EXCEPT AS REQUIRED TO FULFILL THE OBLIGATIONS OF CONTRACTOR'S CONTRACT WITH THE CITY OF PHOENIX.

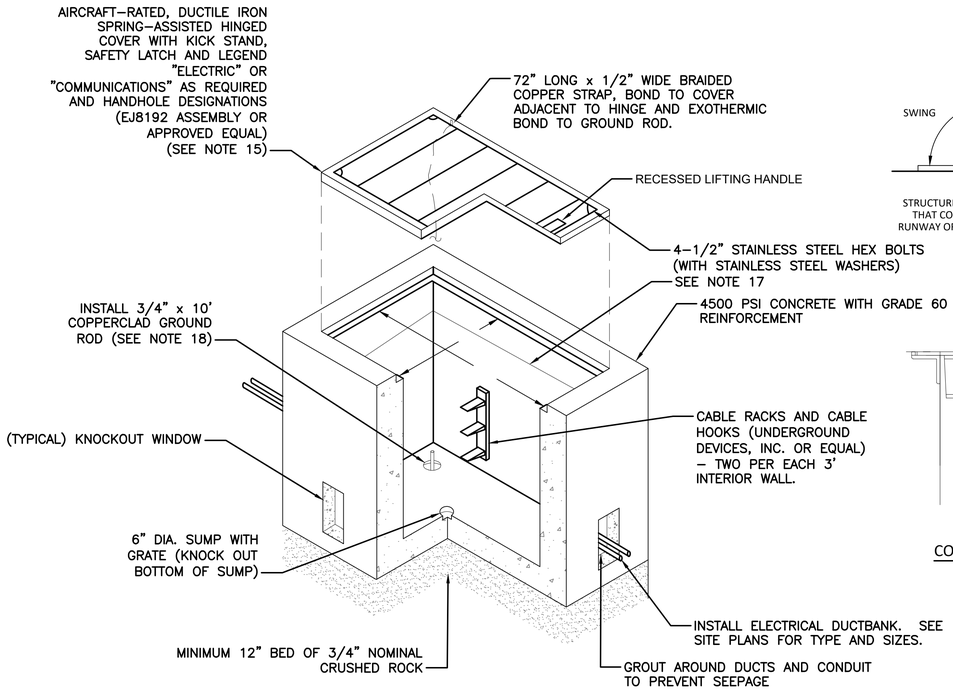

(AIRCRAFT LOAD RATED - SEE SPEC. L-115)

571 TYP 2'x3'x3' HANDHOLE DETAIL

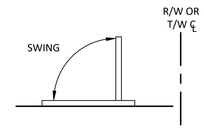

STRUCTURES TO BE INSTALLED SO THAT COVERS OPEN TOWARD RUNWAY OR TAXIWAY CENTERLINE.

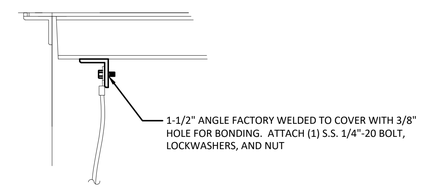

COVER GROUNDING BRACKET

PROVIDE CU BOND FOR ENCLOSURE LID

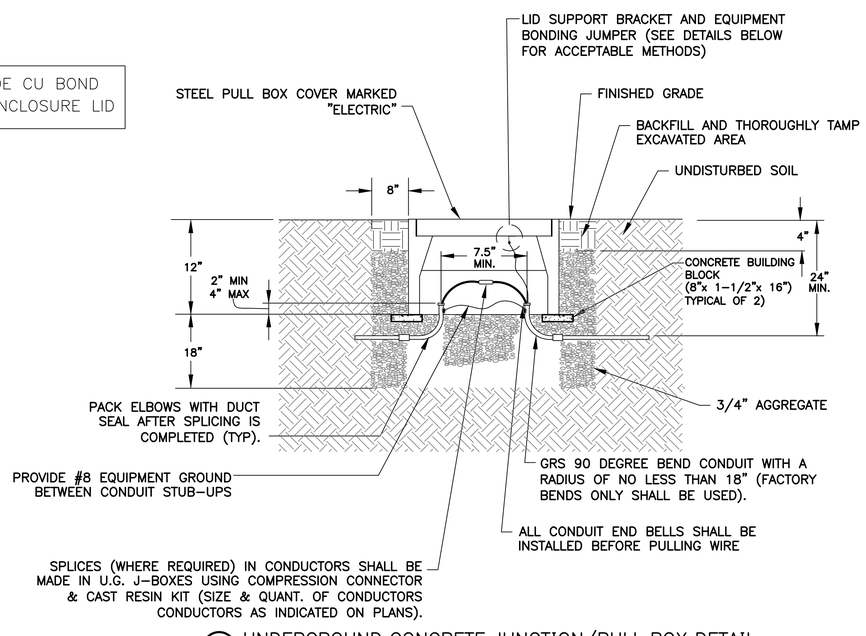

572 TYP UNDERGROUND CONCRETE JUNCTION/PULL BOX DETAIL

GENERAL HANDHOLE INSTALLATION NOTES

1. PRE–CAST AIRCRAFT–RATED CONCRETE HANDHOLE AND DUCTILE IRON COVER SHALL BE DESIGNED FOR A 60 KIPS CONCENTRATED WHEEL LOAD OVER A 12" X 24" AREA, OLD CASTLE PRE–CAST CONCRETE PRODUCTS OR APPROVED EQUAL.
2. ALL CABLE THOUGH HANDHOLE SHALL HAVE SUFFICIENT SLACK SO CABLE AND CONNECTOR CAN BE BROUGHT TO SURFACE FOR SPLICING, PROVIDE MINIMUM TWELVE (12) FEET OF SLACK FOR EACH CABLE ENTERING HANDHOLE.
3. EACH CABLE SHALL BE IDENTIFIED WITH CIRCUIT TAPE AND WIRE TAGS GIVING CIRCUIT IDENTIFICATION (BRADY #PWC–PK–6 OR APPROVED EQUAL).
4. RACK AND SECURE ALL CABLES.
5. TAG LIGHTING CIRCUIT CABLES IN ALL CONCRETE STRUCTURES (TWO REQUIRED PER CABLE).
6. AT GROUND ROD OPENING, DRIVE GROUND ROD INTO EARTH LEAVING SIX (6) INCHES EXTENDING ABOVE FLOOR. SEAL HOLE WATERTIGHT WITH PORTLAND CEMENT GROUT AROUND ROD. DO NOT INSTALL THROUGH DRAIN SUMP.
7. SUBMIT LAYOUT OF EACH HANDHOLE FOR APPROVAL BY ENGINEER, INDICATING ELECTRICAL DUCT, CONDUIT AND SPARE STUBOUTS.
8. PROVIDE HANDHOLES WITH WATERTIGHT SPARE DUCT SLOTS IN EACH EMPTY FACE.
9. EXCAVATION AND BACKFILL NECESSARY FOR THE CONSTRUCTION OF THE HANDHOLE SHALL BE PERFORMED IN ACCORDANCE WITH THE SPECIFICATION REQUIREMENTS.
10. PROVIDE END BELLS FINISHED FLUSH WITH INTERIOR WALLS AND NON–SHRINK GROUT AROUND EACH CONDUIT ENTERING THE HANDHOLE VIA A CONDUIT STUBOUT.
11. COVER SHALL BE 1" MAXIMUM ABOVE FINISHED GRADE. AREA SURROUNDING HANDHOLE SHALL BE GRADED TO DRAIN AWAY FROM HANDHOLE – INCIDENTAL (NPI).
12. BOND AND GROUND COVER AND FRAME TO ROD USING BRAIDED COPPER GROUND STRAP EQUIVALENT AMPACITY TO #2 AWG STRANDED COPPER WIRE.
13. GRADE THE AREA AROUND THE HANDHOLE, 10' IN ALL DIRECTIONS, SUCH TO PREVENT WATER AND DIRT ACCUMULATION ACROSS THE TOP OF THE COVER AND ALLOW WATER TO DRAIN AWAY FROM THE HANDHOLE – INCIDENTAL (NPI).
14. INSTALL PULLING IRONS IN EACH FACE.
15. PROVIDE MANUFACTURER DRAWINGS AND STRUCTURAL CALCULATIONS FOR ALL CONCRETE ELEMENTS OF HANDHOLES AND FABRICATED AIRCRAFT–RATED COVERS.
16. CONNECT COUNTERPOISE TO GROUND ROD IN HANDHOLE. ROUTE AROUND HANDHOLES.
17. A GROUND BUS OF 4/0 BARE COPPER SHALL BE EXOTHERMICALLY BONDED TO THE GROUND ROD AND LOOP THE CONCRETE STRUCTURE WALLS. THE GROUND BUS SHALL BE A MINIMUM OF ONE (1) FOOT (30 CM) ABOVE THE FLOOR OF THE STRUCTURE AND SEPARATE FROM OTHER CABLES. NO. 2 AMERICAN WIRE GAUGE (AWG) BARE COPPER PIG TAILS SHALL BOND THE GROUNDING BUS TO ALL CABLE TRAYS AND OTHER METAL HARDWARE WITHIN THE CONCRETE STRUCTURE. CONNECTIONS TO THE GROUNDING BUS SHALL BE EXOTHERMIC. IF AN EXOTHERMIC WELD IS NOT POSSIBLE, CONNECTION TO THE GROUNDING BUS SHALL BE MADE BY USING CONNECTOR APPROVED FOR DIRECT BURIAL IN SOIL OR CONCRETE PER UL 467. HARD CONNECTIONS MAY BE MECHANICAL USING A LUG DESIGNED FOR THAT PURPOSE.
18. A GROUND ROD SHALL BE INSTALLED IN THE FLOOR OF ALL CONCRETE STRUCTURE SO THAT THE TOP OF ROD EXTENDS SIX (6) INCHES (150MM) ABOVE THE FLOOR. THE GROUND ROD SHALL BE INSTALLED WITHIN ONE (1) FOOT (30 CM) OF A CORNER OF THE CONCRETE STRUCTURE. GROUND RODS SHALL BE INSTALLED PRIOR TO CASTING THE BOTTOM SLAB. WHERE THE SOIL CONDITION DOES NOT PERMIT DRIVING THE GROUND ROD INTO THE EARTH WITHOUT DAMAGE TO THE GROUND ROD, THE CONTRACTOR SHALL DRILL A FOUR (4) INCH (100 MM) DIAMETER HOLE INTO THE EARTH TO RECEIVE THE GROUND ROD. THE HOLE AROUND THE GROUND ROD SHALL BE FILLED THROUGHOUT ITS LENGTH, BELOW SLAB, WITH PORTLAND CEMENT GROUT. GROUND RODS SHALL BE INSTALLED IN PRECAST BOTTOM SLAB OF STRUCTURES BY DRILLING A HOLE THROUGH BOTTOM SLAB AND INSTALLING THE GROUND ROD. BOTTOM SLAB PENETRATION SHALL BE SEALED WATERTIGHT WITH PORTLAND CEMENT GROUT AROUND THE GROUND ROD.

CR engineers
16719 East Palisades Blvd., Suite 202
Fountain Hills, AZ 85268
Phone: (480) 816-5541
Fax: (480) 816-5540

PER CITY OF PHOENIX CODE CHAPTER 2, SECTION 2-28. THESE PLANS ARE FOR OFFICIAL USE ONLY AND MAY NOT BE SHARED WITH OTHERS EXCEPT AS REQUIRED TO FULFILL THE OBLIGATIONS OF CONTRACTOR'S CONTRACT WITH THE CITY OF PHOENIX.

C&S COMPANIES

Registered Professional Engineer (Electrical) CERTIFICATE NO. 36696 CATHERINE M. ALCORN Date Signed 04-08-22 ARIZONA U.S.A.

PER CITY OF PHOENIX CITY CODE CHAPTER 2, SECTION 2-28. THESE PLANS ARE FOR OFFICIAL USE ONLY AND MAY NOT BE SHARED WITH OTHERS EXCEPT AS REQUIRED TO FULFILL THE OBLIGATIONS OF YOUR CONTRACT WITH THE CITY OF PHOENIX

NO.	REVISIONS / SUBMISSIONS	DATE

PHX INT'L CITY OF PHOENIX AVIATION DEPARTMENT

PHOENIX GOODYEAR AIRPORT
NEW APRON AND TAXIWAY CONNECTOR

AV41000077 FAA/ADOT

Designed by: SW
Drawn by: JCA
Checked by: CA
Date: May 2022
Dwg scale:

CIP NO.(S): AV41000077 FAA/ADOT

Sheet Overview Title

2' X 3' X 3' HANDHOLE AND JUNCTION BOX DETAILS

Sheet Reference Number:

EA-504

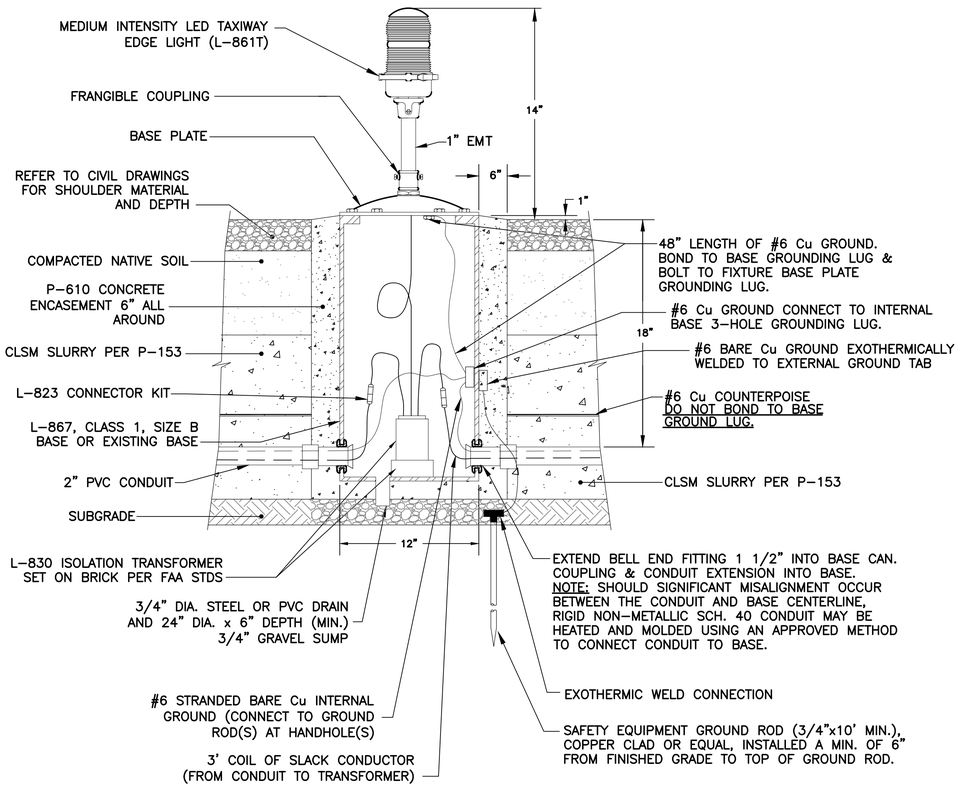

1 TYP ELEVATED TAXIWAY EDGE LIGHT DETAIL

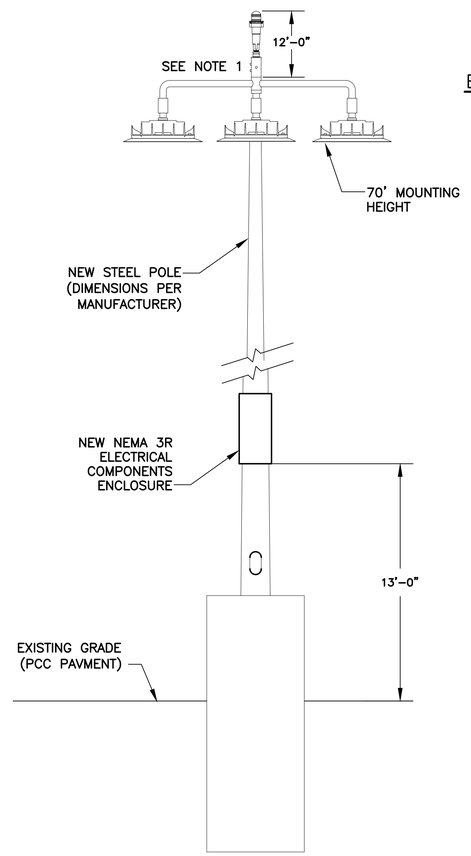

2 TYP APRON LIGHTING (BID ALT #1)

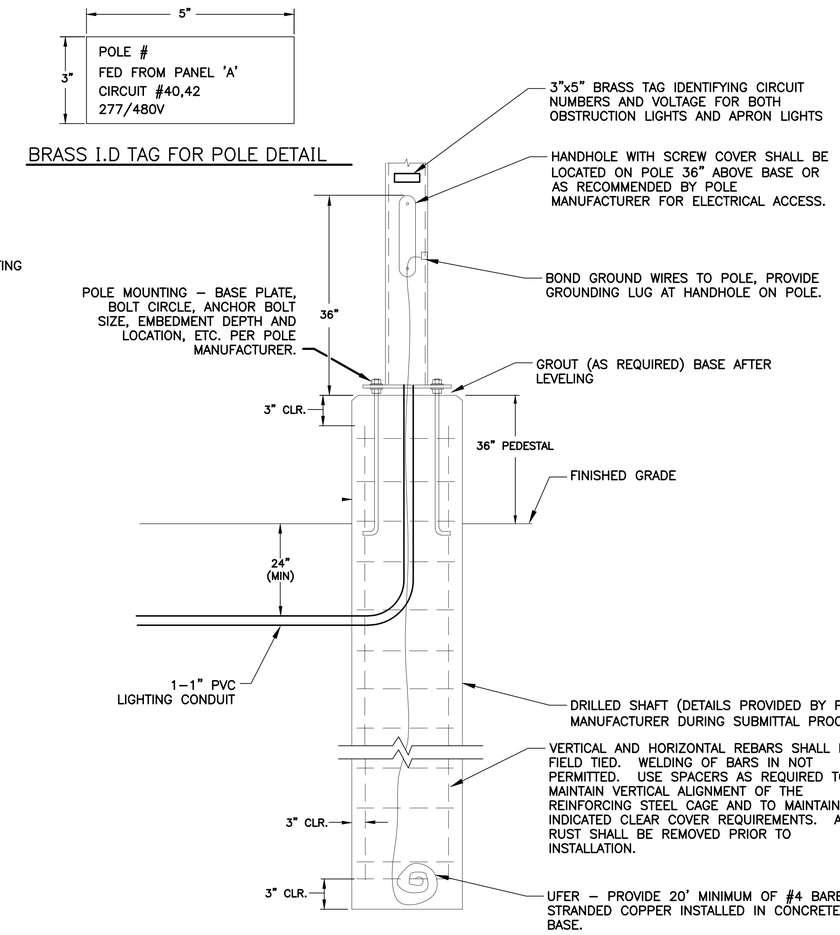

3 TYP TYPICAL APRON LIGHTING POLE FOUNDATION DETAIL (BID ALT #1)

DESIGN CRITERIA

-DESIGN STANDARD: AASHTO STANDARD (SPECIFICATIONS FOR STRUCTURAL SUPPORTS FOR HIGHWAYS SIGNS, LUMINAIRES, AND TRAFFIC SIGNALS, 2008 5TH EDITION WITH INTERIMS TO 2011.

-CONCRETE SHALL HAVE A MINIMUM 28-DAY COMPRESSIVE STRENGTH F'c = 4000 PSI.

-BASIC WIND SPEED: 90 MPH (3 SECOND GUST)

-IMPORTANCE FACTOR: 1.0

-ELEVATION USED FOR WIND PRESSURE DESIGN: 80 FT.

-POLE DESIGN ATTACHMENTS OF ALL MEMBERS AND ANCHOR BOLTS SHALL BE DESIGNED BY POLE MANUFACTURER TO SATISFY THE ABOVE DESIGN CRITERIA.

1. NOTES

CONTRACTOR TO PROVIDE NEW FAA APPROVED 120V LED OBSTRUCTION LIGHT FIXTURES MOUNTING ASSEMBLIES AND INSTALLATION.

2. APRON LIGHTING OR POLE MANUFACTURER SHALL PROVIDE MOUNTING PROVISIONS FOR OBSTRUCTION LIGHTS.

3. CONTRACTOR SHALL COORDINATE WITH APRON LIGHTING MANUFACTURER TO VERIFY THAT PROVISIONS FOR 480V TO 120V STEP DOWN TRANSFORMERS AND ANY PRE-WIRED HARNESS ARE INCLUDED WITH DRIVER AND POLE ASSEMBLIES FOR FEEDING OBSTRUCTION LIGHTS. IF NOT PROVISIONS ARE INCLUDED IN OEM EQUIPMENT, THE CONTRACTOR WILL BE REQUIRED TO PROVIDE AND INSTALL.

NOTE FOR DETAIL 3

1. THE POLE CONCRETE BASE DETAIL IS SHOWN FOR ELECTRICAL ROUGH-IN AND SHALL NOT BE USED FOR THE ACTUAL BASE CONSTRUCTION. STRUCTURAL DETAILS PROVIDED BY MANUFACTURER, SEALED AND SIGNED BY LICENSED ARIZONA STRUCTURAL ENGINEER.
2. GENERAL DIMENSIONS FOR 120' POLES ARE 4' DIAMETER X 22' EMBEDMENT DEPTH.

LIGHTING FIXTURE SCHEDULE (BID ALT #1)

DRAWING SYMBOL CALLOUT	PICTORIAL	LAMPS	MOUNTING	DESCRIPTION	MANUFACTURER MODEL No.	REMARKS
		3-LED 240 WATTS 5700 CCT 75 CRI	POLE	SLIM, LOW PROFILE DESIGN: LOW COPPER DIECAST ALUMINUM, POWDER-COAT PAINTED HOUSING, TOOL LESS LAMP COVER, 1020ma CURRENT FEED, UL LISTED, IP65 RATED,	MUSCO LIGHTING TLC-LED-600 OR EQUAL	FIXTURE OR DRIVER CABINET SHALL BE PROVIDED WITH SEVEN PIN HUBBEL/GATEWAY CONTROL AND TRANSFORMER TO FEED OBSTRUCTION LIGHT.

PER CITY OF PHOENIX CODE CHAPTER 2, SECTION 2-28. THESE PLANS ARE FOR OFFICIAL USE ONLY AND MAY NOT BE SHARED WITH OTHERS EXCEPT AS REQUIRED TO FULFILL THE OBLIGATIONS OF YOUR CONTRACT WITH THE CITY OF PHOENIX.

CR engineers
16719 East Palisades Blvd., Suite 202
Fountain Hills, AZ 85268
Phone: (480) 816-5541
Fax: (480) 816-5540

C&S COMPANIES

Registered Professional Engineer (Electrical) CERTIFICATE NO. 36696 CATHERINE M. ALCORN Date Signed 04-04-22

NO.	REVISIONS / SUBMISSIONS	DATE

PHX DWT CYR
CITY OF PHOENIX AVIATION DEPARTMENT
PHOENIX GOODYEAR AIRPORT
NEW APRON AND TAXIWAY CONNECTOR
AV41000077 FAA/ADOT

Designed by: SW
Drawn by: JCA
Checked by: CA
Date: May 2022
Dwg scale:
CIP NO.(S): AV41000077 FAA/ADOT

Sheet Overview Title
ELEVATED TAXIWAY EDGE LIGHT AND APRON LIGHT DETAILS

Sheet Reference Number:
EA-505

PER CITY OF PHOENIX CODE CHAPTER 2, SECTION 2-28. THESE PLANS ARE FOR OFFICIAL USE ONLY AND MAY NOT BE SHARED WITH OTHERS EXCEPT AS REQUIRED TO FULFILL THE OBLIGATIONS OF CONTRACTOR'S CONTRACT WITH THE CITY OF PHOENIX.

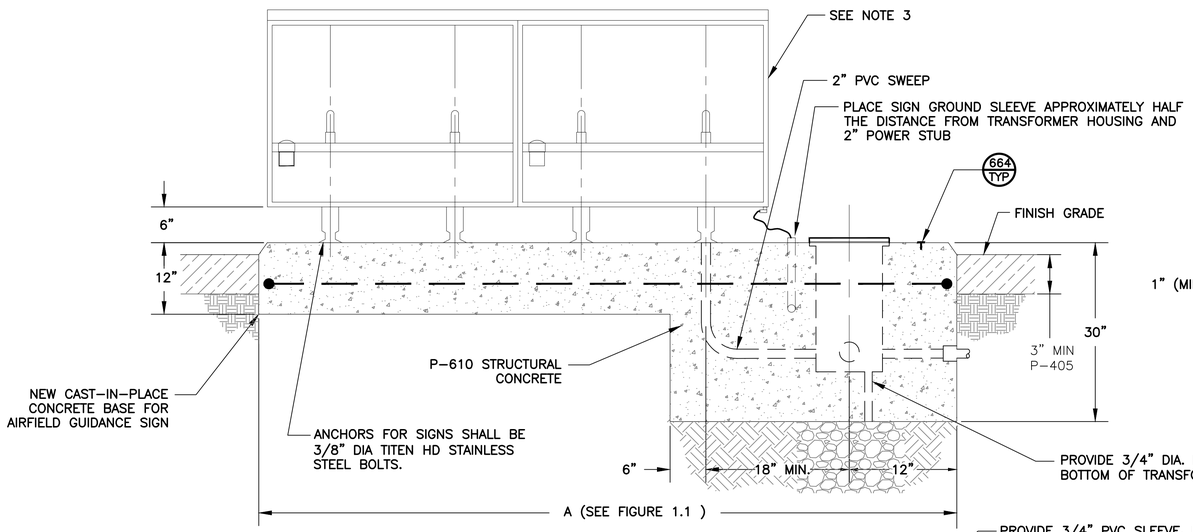

SIDE VIEW

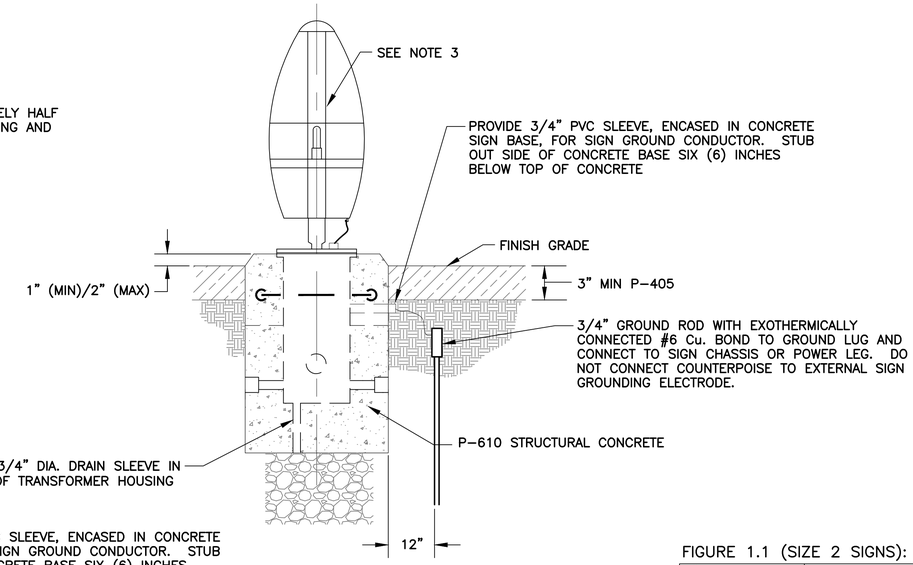

FRONT VIEW (CAN SIDE)

FIGURE 1.1 (SIZE 2 SIGNS):

# OF MODULES	BASE LENGTH (A)
1	62"
2	98"
3	135"
4	171"

* ALL LENGTHS SHOWN ARE MINIMUM

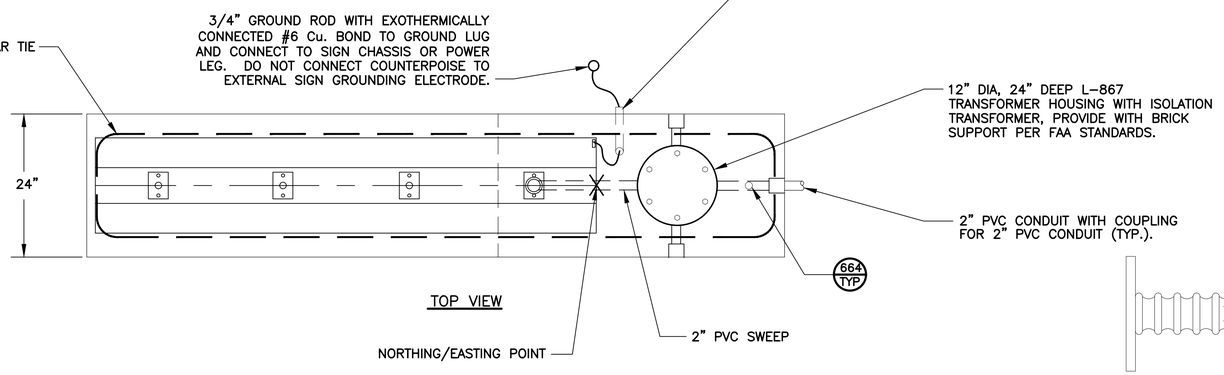

TOP VIEW

919 TYP NEW CAST-IN-PLACE CONCRETE BASE FOR AIRFIELD GUIDANCE SIGN

NOTES

1. NEW CAST-IN-PLACE CONCRETE BASE SHOWN WITH A TWO MODULE SIGN FOR ILLUSTRATIVE PURPOSES ONLY. SEE FIGURE 1.1 FOR ACTUAL LENGTH OF BASE NEEDED FOR MULTIPLE MODULE SIGNS.
2. TRANSFORMER HOUSING SHALL BE ORIENTED AT TAXIWAY/RUNWAY EDGE PER COP/GYR STANDARDS.
3. SIGNS SHALL BE EQUIPPED WITH DISCONNECTING SWITCH AND WEATHERPROOF COVER ON INBOARD OF SIGN.

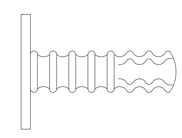

SERVCO BRONZE MARKER

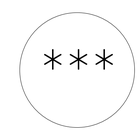

***= TWN
= SG
= RGL
= RW 3-21

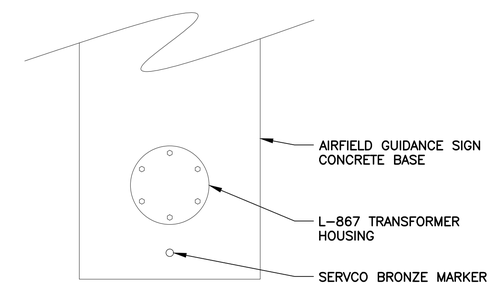

TYPICAL GUIDANCE SIGN BASE MARKER LOCATION

664 TYP CIRCUIT IDENTIFICATION MARKER

NOTE:

1. STAMP CIRCUIT IDENTIFICATION INTO BASE MARKER WITH 1/2" CHARACTERS.
2. PROVIDE CIRCUIT ID MARKERS AT NEW SIGN BASES AND JUNCTION CANS.

SIGN HEIGHTS AND LOCATION DISTANCES FOR TAXIWAY GUIDANCE SIGNS

SIGN SIZE	LEGEND HEIGHT	LEGEND PANEL HEIGHT	INSTALLED* (MAX.)	PERPENDICULAR DISTANCE FROM DEFINED PAVEMENT EDGE TO NEAR SIDE OF SIGN
2	15"	24"	36"	20' – 35'

* THE HEIGHT REFERRED TO IN THIS COLUMN IS THE DISTANCE FROM TOP OF THE SIGN TO GRADE MEASURED AT THE SIDE OF THE SIGN THAT IS NEAREST TO THE APPLICABLE RUNWAY, TAXIWAY , OR APRON. IN ACCORDANCE WITH PARAGRAPH 14, THIS HEIGHT SHOULD BE REDUCED, IF NECESSARY, TO PROVIDED THE REQUIRED 12-INCH CLEARANCE BETWEEN THE TOP OF THE SIGN AND THE CRITICAL AIRCRAFT.

(SEE FAA ADVISORY CIRCULAR 150/5340-18G FOR FURTHER INFORMATION AND CLARIFICATION)

CR engineers
16719 East Palisades Blvd., Suite 202
Fountain Hills, AZ 85268
Phone: (480) 816-5541
Fax: (480) 816-5540

PER CITY OF PHOENIX CODE CHAPTER 2, SECTION 2-28. THESE PLANS ARE FOR OFFICIAL USE ONLY AND MAY NOT BE SHARED WITH OTHERS EXCEPT AS REQUIRED TO FULFILL THE OBLIGATIONS OF YOUR CONTRACT WITH THE CITY OF PHOENIX.

C&S COMPANIES

Registered Professional Engineer (Electrical) CERTIFICATE NO. 36696 CATHERINE M. ALCORN Date Signed 04-04-22 Arizona U.S.A.

NO.	REVISIONS / SUBMISSIONS	DATE

PHX CITY OF PHOENIX AVIATION DEPARTMENT

PHOENIX GOODYEAR AIRPORT
NEW APRON AND TAXIWAY CONNECTOR

AV41000077 FAA/ADOT

Designed by: SW
Drawn by: JBW
Checked by: CA
Date: May 2022
Dwg scale:

CIP NO.(S): AV41000077 FAA/ADOT

Sheet Overview Title

AIRFIELD GUIDANCE SIGN BASE DETAILS

Sheet Reference Number:

EA-506

PER CITY OF PHOENIX CODE CHAPTER 2, SECTION 2-28. THESE PLANS ARE FOR OFFICIAL USE ONLY AND MAY NOT BE SHARED WITH OTHERS EXCEPT AS REQUIRED TO FULFILL THE OBLIGATIONS OF CONTRACTOR'S CONTRACT WITH THE CITY OF PHOENIX.

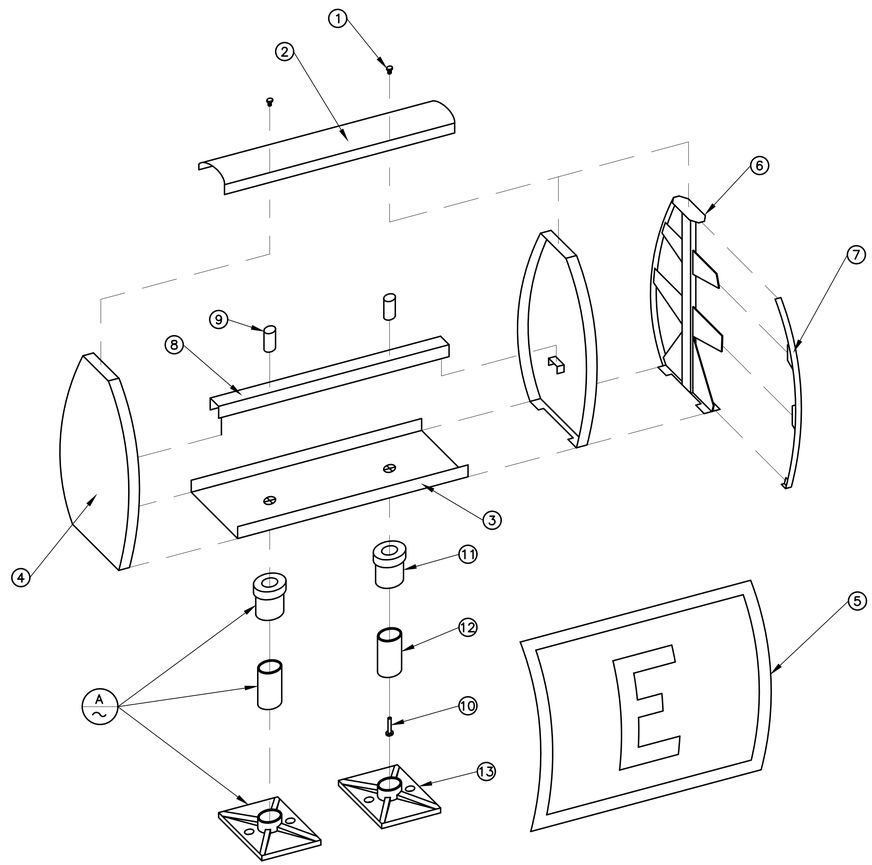

1. TURN FASTENERS
2. TOP COVER (SEE NOTE 4)
3. BASE (SIGN BOTTOM)
4. END PANEL (SEE NOTE 3)
5. LEGEND PANEL
6. SUPPORT JUNCTION
7. FACE INSERT PANEL JOINT
8. LAMP MOUNTING BAR
9. LAMP SOCKET
10. FAA L–823 PLUG
11. SLIP FLANGE
12. FRANGIBLE COUPLING (6" LENGTH)
13. FLOOR FLANGE

NOTES:

1. NEW AIRFIELD SIGNS SHALL BE OF A CURVED FACE DESIGN TO MAINTAIN SIMILAR APPEARANCE TO THAT OF EXISTING SIGNAGE AND TO FACILITATE ARRAY MODIFICATIONS.
2. WHEN JOINING TWO (2) SIGNS FOR ONE ARRAY, PROVIDE NEW SIZE 1 SUPPORT JUNCTION (TREE) AND SIZE 2 FACE INSERT PANEL JOINT (TRACK) OF THE CORRECT COLOR ADDED. DO NOT PROVIDE END PANELS IN THE MIDDLE OF THE ARRAY.
3. PROVIDE EXTERNAL DISCONNECT SWITCH IN WEATHERPROOF ENCLOSURE.
4. PROVIDE CURVED SIGN TOPS THAT PROVIDE ADDITIONAL SIGN PANEL SUPPORT IF AVAILABLE BY MANUFACTURER.

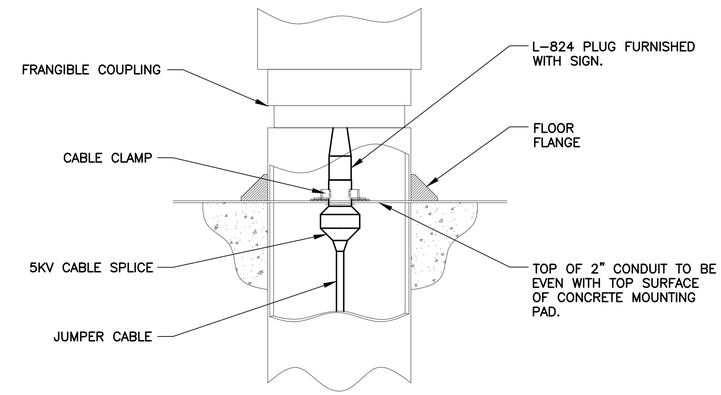

A TYP POWER SUPPORT LEG

CR engineers
16719 East Palisades Blvd., Suite 202
Fountain Hills, AZ 85268
Phone: (480) 816-5541
Fax: (480) 816-5540

C&S COMPANIES

Registered Professional Engineer (Electrical) CERTIFICATE NO. 36696 CATHERINE M. ALCORN Date Signed 04-04-22 Arizona U.S.A.

NO.	REVISIONS / SUBMISSIONS	DATE

PHX DVT CYR
CITY OF PHOENIX AVIATION DEPARTMENT
PHOENIX GOODYEAR AIRPORT
NEW APRON AND TAXIWAY CONNECTOR
AV41000077 FAA/ADOT

Designed by: SW
Drawn by: JBW
Checked by: CA
Date: May 2022
Dwg. scale:

CIP NO.(S): AV41000077 FAA/ADOT

Sheet Overview Title
AIRFIELD GUIDANCE SIGN DETAILS

Sheet Reference Number:
EA-507

SIGN NUMBER	SIGN WITH FACE DESIGNATIONS	FACE A MESSAGE	FACE B MESSAGE	FACE A COLOR	FACE B COLOR	STYLE	CLASS	SIZE	SHEET NUMBER	SCOPE OF WORK
R4–1	A [redacted] B RA | MP | 4→	—	RA | MP | 4→	Y/B | Y/B | Y/B	BLANK	2	5	2	EA101	INSTALL NEW AIRFIELD GUIDANCE SIGN AND ISOLATION TRANSFORMER ON NEW SIGN BASE. ADD NEW PANELS AND FACE INSERT CHANNELS SHOWN.
R4–2	A [redacted] B ←3 | 21 | →	—	←3 | 21 | →	Y/B | Y/B | Y/B	BLANK	2	5	2	EA101	INSTALL NEW AIRFIELD GUIDANCE SIGN AND ISOLATION TRANSFORMER ON NEW SIGN BASE. ADD NEW PANELS AND FACE INSERT CHANNELS SHOWN.
R4–3	A [redacted] B ←R | AM | P4	—	←R | AM | P4	Y/B | Y/B | Y/B	BLANK	2	5	2	EA101	INSTALL NEW AIRFIELD GUIDANCE SIGN AND ISOLATION TRANSFORMER ON NEW SIGN BASE. ADD NEW PANELS AND FACE INSERT CHANNELS SHOWN.
A3–5	RA MP 3↓ ←3 | 21→	EXISTING				EXISTING			EA101	INSTALL SALVAGED AIRFIELD GUIDANCE SIGN AND ISOLATION TRANSFORMER ON NEW SIGN BASE.

NOTES

1. MODULE SIZES ARE GIVEN FOR ESTIMATION ONLY AND ARE SUBJECT TO CHANGE BY SIGN MANUFACTURER
2. CONTRACTOR SHALL PERFORM AND SUBMIT COMPLETE FIELD SURVEY/RECORD DRAWINGS FOR ALL EQUIPMENT PRIOR TO FINAL PAYMENT.

NEW TAXIWAY EDGE LIGHT LOCATIONS

FIXTURE #	NORTHING	EASTING	CIRCUIT	BASE	LAMP	TRANSFORMER	TYPE
TW–1	882629.89	561238.68	TAXIWAY A	L–867	LED	10/15W	L–861T(L)
TW–2	882690.31	561289.57	TAXIWAY A	L–867	LED	10/15W	L–861T(L)
TW–3	882727.01	561338.50	TAXIWAY A	L–867	LED	10/15W	L–861T(L)
TW–4	882763.70	561387.43	TAXIWAY A	L–867	LED	10/15W	L–861T(L)
TW–5	882749.30	561420.67	TAXIWAY A	L–867	LED	10/15W	L–861T(L)
TW–6	882871.38	561522.75	TAXIWAY A	L–867	LED	10/15W	L–861T(L)
TW–7	882888.63	561510.91	TAXIWAY A	L–867	LED	10/15W	L–861T(L)
TW–8	882905.12	561499.04	TAXIWAY A	L–867	LED	10/15W	L–861T(L)
TW–9	882942.71	561515.43	TAXIWAY A	L–867	LED	10/15W	L–861T(L)
TW–10	882980.29	561531.81	TAXIWAY A	L–867	LED	10/15W	L–861T(L)
TW–11	883017.44	561548.01	TAXIWAY A	L–867	LED	10/15W	L–861T(L)
TW–12	883529.38	562043.88	TAXIWAY A	L–867	LED	10/15W	L–861T(L)

NEW AIRFIELD GUIDANCE SIGN LOCATIONS

SIGN	NORTHING	EASTING
R4–1	882863.98	561271.01
R4–2	882739.26	561407.46
R4–3	882914.08	561519.71
A3–5	883500.57	562039.21

NEW HANDHOLE LOCATIONS

HH–#	NORTHING	EASTING
HH–1	882750.77	561409.67
HH–2	882890.38	561520.29
HH–3	883405.62	561889.11
HH–4	882961.77	561527.50
HH–5	882704.20	561322.77
HH–6	882312.92	561011.52
HH–7	881921.11	560700.90
HH–8	882529.71	560389.77
HH–9	881139.47	560078.42
HH–10	880647.68	559688.83
HH–11	880404.98	559992.86
HH–12	883242.14	562102.28

EQUIPMENT LOCATION STANDARDS TABLE

EQUIPMENT TYPE	LOCATION STANDARD	NOTES
TAXIWAY EDGE LIGHT	2'–10'	MEASURE TO CENTER OF LIGHT FIXTURE STATION/OFFSET GIVEN IS CENTER OF LIGHT FIXTURE
SIZE 2 AIRFIELD GUIDANCE SIGNS	20' – 35'	MEASURE TO SIGN EDGE CLOSEST TO TAXIWAY EDGE/OUTER TAXIWAY EDGE MARKING
HANDHOLE		NORTHING/EASTING GIVEN IS CENTER OF HANDHOLE LID

GENERAL NOTES

1. EQUIPMENT NUMBERS SHOWN ARE FOR CONSTRUCTION REFERENCE ONLY. COORDINATE WITH AIRPORT MAINTENANCE FOR LABELING OF ALL EQUIPMENT.
2. CONTRACTOR TO ENSURE NEW TAXIWAY EDGE LIGHT LOCATIONS DO NOT EXCEED 10 FEET FROM EDGE OF FULL STRENGTH PAVEMENT OR OUTER EDGE OF TAXIWAY EDGE MARKING AND ARE IN–LINE WITH EXISTING TAXIWAY EDGE LIGHTING – PERFORM FIELD ADJUSTMENTS AS NECESSARY.

CR engineers
16719 East Palisades Blvd., Suite 202
Fountain Hills, AZ 85268
Phone: (480) 816-5541
Fax: (480) 816-5540

PER CITY OF PHOENIX CODE CHAPTER 2, SECTION 2-28. THESE PLANS ARE FOR OFFICIAL USE ONLY AND MAY NOT BE SHARED WITH OTHERS EXCEPT AS REQUIRED TO FULFILL THE OBLIGATIONS OF YOUR CONTRACT WITH THE CITY OF PHOENIX.

C&S COMPANIES

Registered Professional Engineer (Electrical) CERTIFICATE NO. 36696 CATHERINE M. ALCORN Date Signed 05-06-22 Arizona U.S.A.

PER CITY OF PHOENIX CODE CHAPTER 2, SECTION 2-28. THESE PLANS ARE FOR OFFICIAL USE ONLY AND MAY NOT BE SHARED WITH OTHERS EXCEPT AS REQUIRED TO FULFILL THE OBLIGATIONS OF YOUR CONTRACT WITH THE CITY OF PHOENIX.

NO.	REVISIONS / SUBMISSIONS	DATE

PHX DVT CYR
CITY OF PHOENIX AVIATION DEPARTMENT
PHOENIX GOODYEAR AIRPORT
NEW APRON AND TAXIWAY CONNECTOR
AV41000077 FAA/ADOT

Designed by: SW
Drawn by: JCA
Checked by: CA
Date: May 2022
Dwg scale:

CIP NO.(S): AV41000077 FAA/ADOT

Sheet Overview Title

SIGN SCHEDULE
AND EQUIPMENT DATA TABLES

Sheet Reference Number:
EA-601

PER CITY OF PHOENIX CODE CHAPTER 2, SECTION 2-28. THESE PLANS ARE FOR OFFICIAL USE ONLY AND MAY NOT BE SHARED WITH OTHERS EXCEPT AS REQUIRED TO FULFILL THE OBLIGATIONS OF CONTRACTOR'S CONTRACT WITH THE CITY OF PHOENIX.

TAG	EXISTING COPPER CONDUCTOR/CONDUIT SCHEDULE
3.55	3–#6, #10 GND, 1"C (EXISTING)
4.55	4–#6, #10 GND, 1"C (EXISTING)
4.70	2–#4, #10 GND, 1 1/4"C – PER NEC 10'–0' TAP RULE (EXISTING)
3.95	3–#2, #2 NEUTRAL, #8 GND, 1 1/2"C (EXISTING)
3.230	3–4/0, #4 GND, 2"C (NEW)
3.255	2 SETS OF THE FOLLOWING–3–250 KCMIL, 250 KCMIL NEUTRAL, 1/0 GND, 3"C (EXISTING)

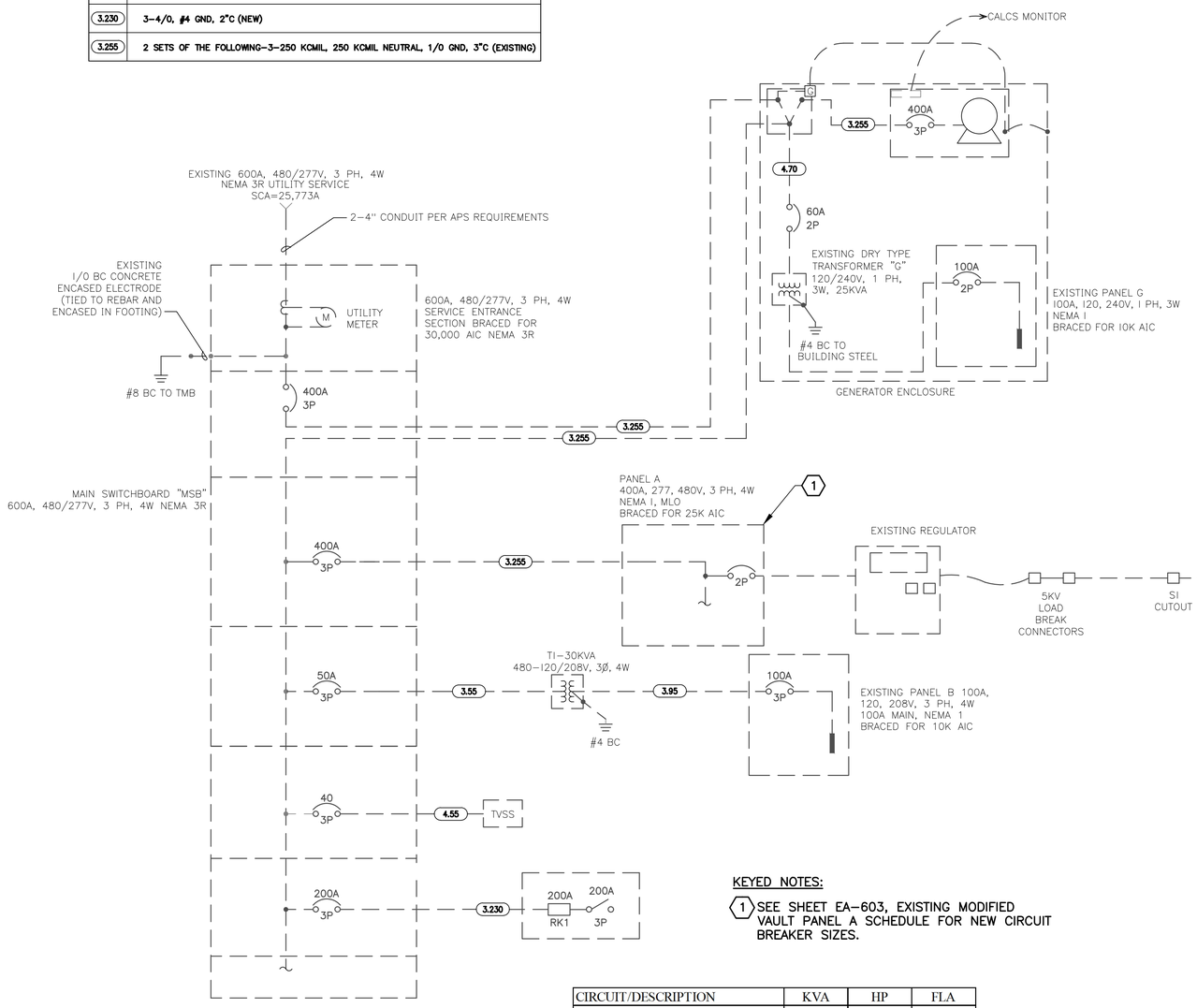

A SINGLE LINE DIAGRAM SES AT VAULT
(BID ALT #1)

KEYED NOTES:

1. SEE SHEET EA–603, EXISTING MODIFIED VAULT PANEL A SCHEDULE FOR NEW CIRCUIT BREAKER SIZES.

CIRCUIT/DESCRIPTION	KVA	HP	FLA
Panel A (Modified Loads)	28.6		103.3
Existing Panel B	4.3		9.0
Existing Panel G	5.2		10.8
SUBTOTAL			123.1
+ 25% OF LARGEST MOTOR			0.0
TOTAL AMPS @ 480V/3PHASE			123.1
EXISTING SERVICE SIZE (AMPS)			600.0

B LOAD CALCUALATIONS SES AT VAULT
(BID ALT #1)

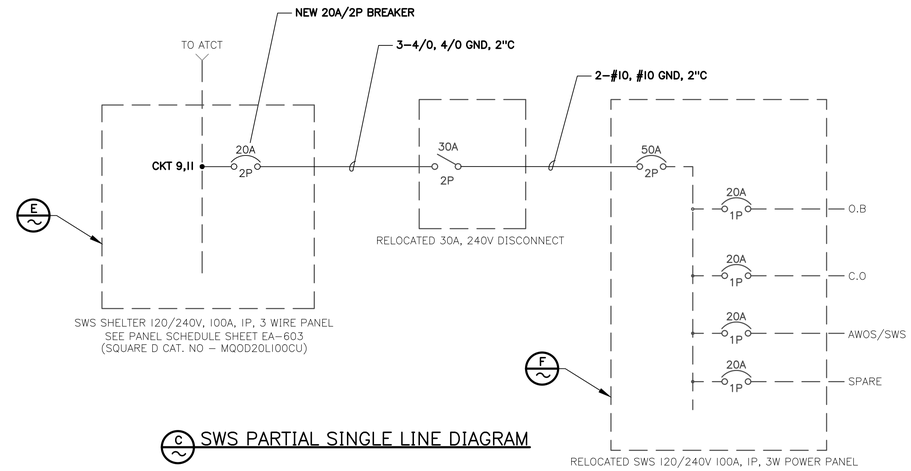

C SWS PARTIAL SINGLE LINE DIAGRAM

CIRCUIT/DESCRIPTION	KVA	HP	FLA
EXISTING PEAK DEMAND	22.9		110.0
METER #AW8212			
FUTURE AWOS	6.9		33.2
SUBTOTAL			143.2
+ 25% OF LARGEST MOTOR			0.0
TOTAL AMPS @ 208V/3PHASE			143.2
EXISTING SERVICE SIZE (AMPS)			400.0

D LOAD CALCUALATIONS SES AT ATCT

E EXISTING SWS PANEL AND SCHEDULE

F EXISTING SWS POWER PANEL

CR engineers
16719 East Palisades Blvd., Suite 202
Fountain Hills, AZ 85268
Phone: (480) 816-5541
Fax: (480) 816-5540

PER CITY OF PHOENIX CODE CHAPTER 2, SECTION 2-28. THESE PLANS ARE FOR OFFICIAL USE ONLY AND MAY NOT BE SHARED WITH OTHERS EXCEPT AS REQUIRED TO FULFILL THE OBLIGATIONS OF YOUR CONTRACT WITH THE CITY OF PHOENIX.

C&S COMPANIES

Registered Professional Engineer (Electrical) CERTIFICATE NO. 36696 CATHERINE M. ALCORN Date Signed 5-6-22 ARIZONA U.S.A.

NO.	REVISIONS / SUBMISSIONS	DATE

PHX CITY OF PHOENIX AVIATION DEPARTMENT
PHOENIX GOODYEAR AIRPORT
NEW APRON AND TAXIWAY CONNECTOR
AV41000077 FAA/ADOT

Designed by: SW
Drawn by: JBW
Checked by: CA
Date: May 2022
Dwg scale:
CIP NO.(S): AV41000077 FAA/ADOT

Sheet Overview Title
SINGLE LINE DIAGRAMS AND LOAD CALCULATIONS

Sheet Reference Number:
EA-602

Sheet 60 of 61

PER CITY OF PHOENIX CODE CHAPTER 2, SECTION 2-28. THESE PLANS ARE FOR OFFICIAL USE ONLY AND MAY NOT BE SHARED WITH OTHERS EXCEPT AS REQUIRED TO FULFILL THE OBLIGATIONS OF CONTRACTOR'S CONTRACT WITH THE CITY OF PHOENIX.

PANEL: A		VOLTAGE: 480/277V		MAIN CB: MLO		BUS AMPS: 400A		
CB TYPE: BOLT-ON		MOUNTING: SURFACE		BRACING: 25K AIC		BKR AIC: 25K		
CIRCUIT DESCRIPTION	BKR	CIRCUIT	PHASE A	PHASE B	PHASE C	CIRCUIT	BKR	CIRCUIT DESCRIPTION
7.5KW CCR (R/W 3-21)	30	1	2000					
	/					2	40	10KW CCR (SPARE) NORTH
	2	3		2000			/	
						4	2	
10KW CCR (T/W A SOUTH)	40	5			4166			
	/					6	40	10KW CCR (SPARE) SOUTH
	2	7	4166				/	
						8	2	
7.5KW CCR (SIGNS)	30	9		2277				
	/			1666		10	30	7.5KW CCR (T/W A NORTH)
	2	11			2277		/	
					1666	12	2	
SPARE (FUTURE CCR)	50	13						
	/					14	50	SPARE (FUTURE CCR)
	2	15					/	
						16	2	
SPARE (FUTURE CCR)	50	17						
	/				551	18	20 / 1	INTERIOR LIGHTS
	2	19						
			180			20	20 / 1	EXTERIOR LIGHTS
SPARE (FUTURE CCR)	50	21						
	/			5218		22	25	HP-1
	2	23						
					5218	24	/	
SPACE		25						
			5218			26	3	
HP-2	25	27		5218				
				600		28	20	REILS NORTH
	/	29			5218		/	
					600	30	2	
	3	31	5218					
			800			32	20	PAPI NORTH
REILS SOUTH	20	33		600			/	
	/			800		34	2	
	2	35			600			
					800	36	20	PAPI SOUTH
SPACE		37					/	
			800			38	2	
4KW CCR RUNWAY GUARD LIGHTS	15	39		1500				
(RGLs)	/			1335		40	20	NEW APRON LIGHT
	2	41			1500		/	
					1335	42	2	
CONNECTED KVA PER PHASE			18.4	21.2	23.9	NOTES:		PROVIDE BREAKER TYPE HED4
						SIEMENS SENTRON SERIES; 25K AIC RATED MINIMUM		
CONNECTED AMPS PER PHASE			66.4	76.6	86.4	AT 480VAC		
25% OF CONTINUOUS & LIGHTING LOAD (KVA)			2.0	2.7	3.4			
LARGEST MOTOR (25%)			1.3	1.3	1.3			
CODE KVA PER PHASE			21.7	25.2	28.6			
CODE AMPS PER PHASE AT 277V			78.2	91.0	103.3			

(A) EXISTING PANEL A SCHEDULE (LOCATED IN VAULT)
(BID ALT #1)

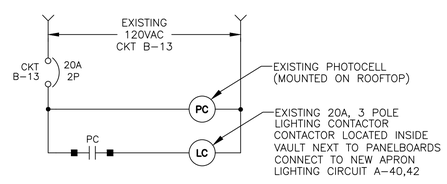

(B) EXISTING LIGHTING CONTROL SCHEMATIC
(BID ALT #1)

(SEE NOTES 1 AND 2)

PANEL: SWS		VOLTAGE: 120/240		MAIN CB: 100A		BUS AMPS: 100A	
CB TYPE: BOLT-ON		MOUNTING: SURFACE		BRACING: 10,000		BKR AIC: 10,000	
CIRCUIT DESCRIPTION	BKR	CIRCUIT	LINE 1	LINE 2	CIRCUIT	BKR	CIRCUIT DESCRIPTION
LIGHTS	20/1	1					
					2	20	HVAC UNIT
RECEPTACLES	201	3				/	
					4	2	
SPARE	20/1	5					
					6	20/1	RECEPTACLES
SPARE	20/1	7					
					8	20/1	SPARE
RELOCATED SWS	20	9					
	/				10	20/1	FAN/LOUVER
	2	11					
					12		
SURGE ARRESTOR	20	13					
	/				14		
	2	15					
					16		
		17					
					18		
		19					
					20		
CONNECTED KVA PER PHASE			0.0	0.0	NOTES:		
					NEW INDICATED IN RED		
CONNECTED AMPS PER PHASE			0.0	0.0			
					NEW BREAKERS TO MATCH EXISTING IN		
25% OF CONTINUOUS & LIGHTING LOAD (KVA)			0.0	0.0	BRACING AND TYPE		
LARGEST MOTOR (25%)			0.0	0.0			
CODE KVA PER PHASE			0.0	0.0			
CODE AMPS PER PHASE AT 120V			0.0	0.0			

(A) EXISTING PANEL SWS SCHEDULE

NOTES:

1. EXISTING SURGE ARRESTOR IS LOCATED ON CIRCUITS 11–13. 20A/2P BREAKER TO BE RELOCATED TO CIRCUIT 13–15.
2. EXISTING SWS ON A 20/1P BREAKER ON CIRCUIT 9. TO BE REPLACED WITH A 20A/2P BREAKER AND PLACED ON CIRCUIT 9–11.
3. NO NEW LOADS ADDED TO PANEL SWS.

CR engineers
16719 East Palisades Blvd., Suite 202
Fountain Hills, AZ 85268
Phone: (480) 816-5541
Fax: (480) 816-5540

PER CITY OF PHOENIX CODE CHAPTER 2, SECTION 2-28. THESE PLANS ARE FOR OFFICIAL USE ONLY AND MAY NOT BE SHARED WITH OTHERS EXCEPT AS REQUIRED TO FULFILL THE OBLIGATIONS OF YOUR CONTRACT WITH THE CITY OF PHOENIX.

C&S COMPANIES

Registered Professional Engineer (Electrical) CERTIFICATE NO. 36696 CATHERINE M. ALCORN Date Signed 5-13-22 ARIZONA U.S.A.

PER CITY OF PHOENIX CODE CHAPTER 2, SECTION 2-28. THESE PLANS ARE FOR OFFICIAL USE ONLY AND MAY NOT BE SHARED WITH OTHERS EXCEPT AS REQUIRED TO FULFILL THE OBLIGATIONS OF YOUR CONTRACT WITH THE CITY OF PHOENIX.

NO.	REVISIONS / SUBMISSIONS	DATE

PHX DVT CYR
CITY OF PHOENIX AVIATION DEPARTMENT
PHOENIX GOODYEAR AIRPORT
NEW APRON AND TAXIWAY CONNECTOR
AV41000077 FAA/ADOT

Designed by: SW
Drawn by: JBW
Checked by: CA
Date: May 2022
Dwg scale:

CIP NO.(S): AV41000077 FAA/ADOT

Sheet Overview Title

PANEL SCHEDULE
AND LIGHTING CONTROL SCHEMATIC

Sheet Reference Number:

EA-603

Sheet 61 of 61